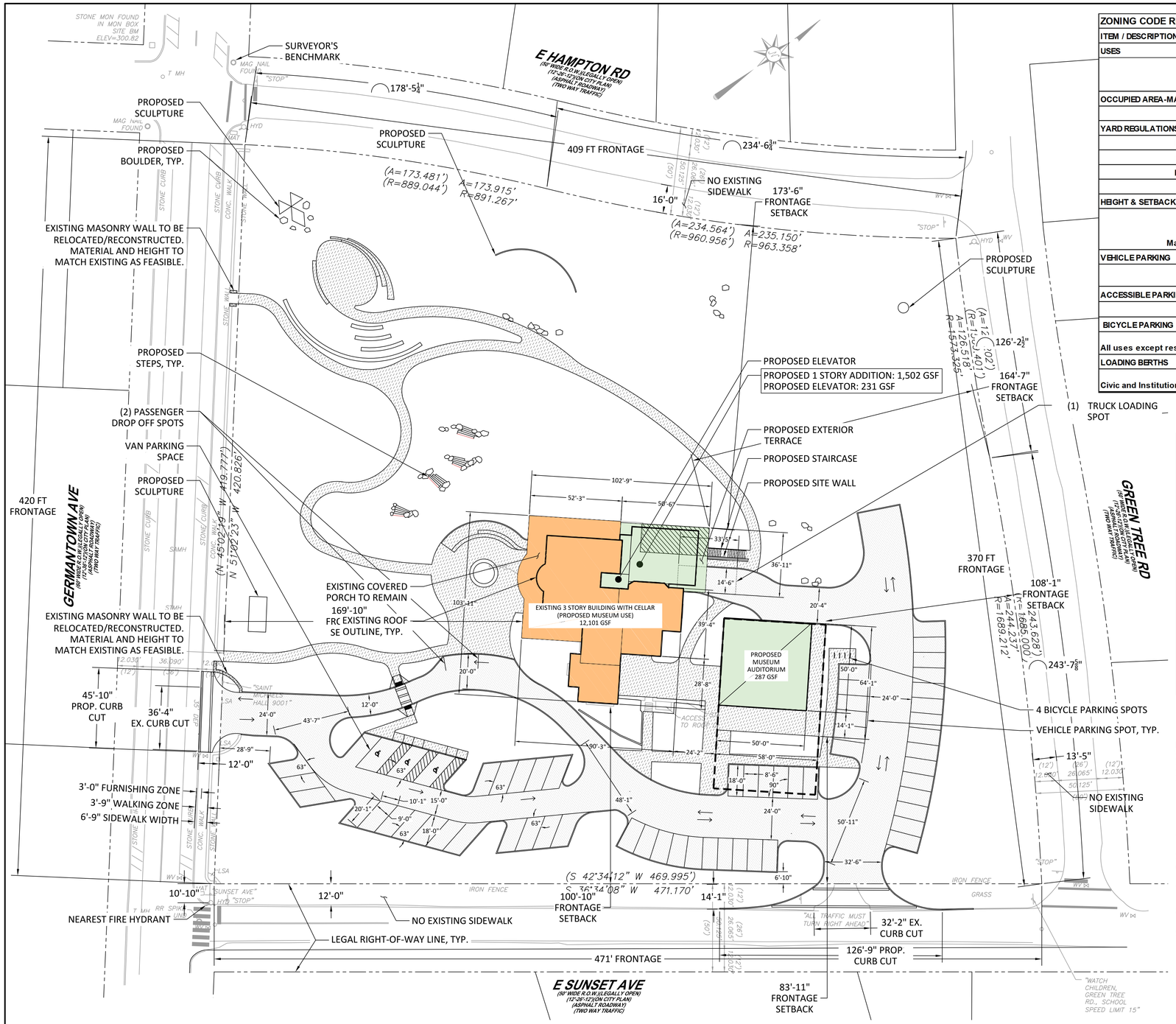

ZONING CODE REFERENCES

ITEM / DESCRIPTION	CODE SECTION	REQUIRED / PERMITTED		PROPOSED	
USES					
	14-602-1	Single Family, Passive Recreation, Family Childcare, Community Garden		Museum, Accessory Cafe, Accessory Auditorium, and Accessory Parking	
OCCUPIED AREA-MAX					
All Uses	14-701-1	30%	51,462 SF	7.95%	13,634 SF
YARD REGULATIONS					
Minimum Front Yard	14-701-1	25 FT		169' - 10"	
Side Yards Required	14-701.3	Not Applicable			
Minimum Side Yards	14-701.3	Not Applicable			
Minimum Rear Yard	14-701.3	Not Applicable			
HEIGHT & SETBACK REGULATIONS					
Maximum Building Height	14-701-1	38 FT		*Existing Building Height and Proposed Elevator Mechanical Tower* - 44 FT 4-1/4 INCHES	
VEHICLE PARKING					
All Other Uses	14-802	1/1000 SF	16	60	
ACCESSIBLE PARKING					
	14-802-4	3, INCLUDING 1 VAN		3, INCLUDING 1 VAN	
BICYCLE PARKING					
All uses except residential and public parking	14-804-1	2 for 7501-20,000 SF	2	4	
LOADING BERTHS					
Civic and Institutional	14-806	0 for less than 100,000 SF	0	1	

SITE INFORMATION

Address:	9101 Germantow n Ave, Philadelphia, PA 19118	
Zoning District:	RSD-3 Residential/Residential Mixed Use	
Overlays	/WWO Wissahickon Watershed Overlay	
	Open Space and Natural Resources - Steep Slope Protection	
	EDO Eighth District Overlay	
Lot Area (Total):	**171,541 SF**	
Gross Floor Area	**Existing**	**Proposed**
Cellar (excluded from Zoning SF)	6,152 SF	6,364 SF
Ground Floor	5,819 SF	7,398 SF
2nd Floor	3,987 SF	4,064 SF
3rd Floor	2,295 SF	2,372 SF
Auditorium Cellar (excluded from Zoning SF)		4,435 SF
Auditorium Ground Floor		287 SF
Gross Floor Area (Total):	**12,101 SF**	**14,121 SF**
Total Added Floor Area		**2,020 SF**

NOTES:
1. NO LOT ADJUSTMENTS OR SUBDIVISION ARE BEING PROPOSED.
2. ALL EXISTING STREET FURNITURE IS SHOWN.
3. A PORTION OF THE EXISTING BUILDING ALONG THE NORTH EDGE IS LOCATED CLOSE TO SLOPES >25%. PROPOSED MODIFICATIONS OF THE EXISTING BUILDING CALL FOR A CANTILEVER ADDITION OVER THIS AREA. NO PORTION OF THE SLOPES >25% WILL BE DISTURBED.
4. ALL DEDICATED RIGHT-OF-WAYS SHOWN. THERE ARE NO NON-DEDICATED RIGHT-OF-WAYS.
5. ALL NEAREST INTERSECTIONS SHOWN.
6. NEAREST STREAM IS WISSAHICKON CREEK 1950 FT AWAY AT ITS CLOSEST APPROACH.
7. PLANS COMPLY WITH FORM AND DESIGN REQUIREMENTS OF SECTION 14-703.
8. LIGHTING ON SITE SHALL COMPLY WITH REQUIREMENTS OF SECTION 14-707.
9. PARKING LOT LANDSCAPING DETAILS ARE PROVIDED ON Z-106.

COVERAGE SUMMARY

COVERAGE TYPE	AREA		SITE %
TOTAL PROPERTY	171541 SF	3.94 AC	100%
EXISTING IMPERVIOUS	21995 SF	0.50 AC	12.8%
PROPOSED IMPERVIOUS	56381 SF	1.29 AC	32.9%
CHANGE IN IMPERVIOUS	34386 SF	0.79 AC	20.0%
MAX. IMPERVIOUS*	60039 SF	1.38 AC	35.0%
EXISTING PERVIOUS	149546 SF	3.44 AC	87.2%
PROPOSED PERVIOUS	115160 SF	2.65 AC	67.1%
CHANGE IN PERVIOUS	-34386 SF	-0.79 AC	-20.0%

**MAX. IMPERVIOUS COVER GOVERNED BY REQUIREMENTS OF WISSAHICKON WATERSHED OVERLAY: CATEGORY 3.*

LEGEND
- EXISTING BUILDING
- PROPOSED BUILDING
- PROPOSED BUILDING OUTLINE BELOW GRADE
- PROPOSED STRUCTURE
- PORTION OF PROPOSED BUILDING CANTILEVERED OVER STEEP SLOPE
- PROPOSED PARKING LOT
- PROPOSED WALKWAY
- RELOCATED MASONRY WALL
- PROPERTY/ROW LINE

30 0 30 60
1 INCH = 30 FEET

MATTHEW BAIRD ARCHITECTS
277 Broadway, 10th Floor
New York, NY 10007
T: 212.334.2499
F: 212.285.1049

LANDSCAPE ARCHITECT:
ANDROPOGON
2209 Chestnut Street
Philadelphia, PA 19103
T: 215 487 0700

LOCAL ARCHITECT:
KRIEGER AND ASSOCIATES
14 W Highland Avenue
Philadelphia, PA 19118
T: 215 247 2020

CIVIL ENGINEER:
MELIORA
259 Morgan Street
Phoenixville, PA 19460
T: 610 933 0123

ZONING CODE:
BALLARD SPAHR
1735 Market Street, 51st Floor
Philadelphia, PA 19103
T: 215 665 8500

THIS DRAWING IS ONLY VALID FOR CONSTRUCTION, BIDDING OR GOVERNMENT AGENCY REVIEW IF SAID DRAWING BEARS AN ORIGINAL STAMPING OF THE SEAL OF THE ARCHITECT WHOSE SIGNATURE APPEARS HEREON. THIS DRAWING IS THE PRODUCT OF SERVICE AND IS THE PROPERTY OF MATTHEW BAIRD ARCHITECT, P.L.C. IT IS TO BE USED ONLY FOR THE PROJECT NOTED HEREIN. REUSE OF THIS DRAWING FOR ANY OTHER PROJECT OR ALTERATION OR EXTENSION OF THIS PROJECT IS PROHIBITED WITHOUT THE WRITTEN PERMISSION OF MATTHEW BAIRD ARCHITECT, P.L.C. ANY UNAUTHORIZED REUSE IS A VIOLATION OF US COPYRIGHT LAW. UNAUTHORIZED ALTERATIONS OR ADDITIONS TO THIS DRAWING IS A VIOLATION OF SECTION 7209 OF THE NEW YORK STATE EDUCATION LAW.

REVISION
NO: DATE: REMARK:

ISSUED FOR:
ZONING PERMIT

SITE PLAN

PROJECT:
0224
WOODMERE ART MUSEUM
ST. MICHAEL'S HALL

9001 Germantown Ave.
Philadelphia, PA 19118

Date: APRIL 22, 2022
Scale: 1" = 30'
Dwg By: MD/AM
Proj No: 0224-SMH

SEAL + SIGNATURE:
COMMONWEALTH OF PENNSYLVANIA
REGISTERED PROFESSIONAL
ALTUE M MACY
ARCHITECT
No. RA-PE089399

Z-101
SHEET # OF #

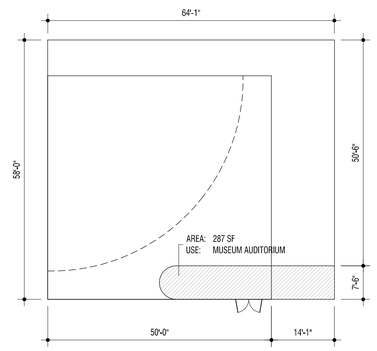

6 GROUND FLOOR PLAN - AUDITORIUM
1/16" = 1'-0"

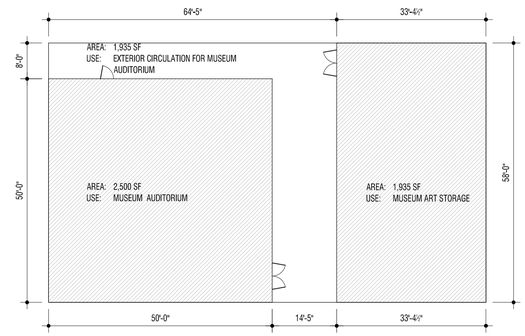

5 BASEMENT PLAN - AUDITORIUM
1/16" = 1'-0"

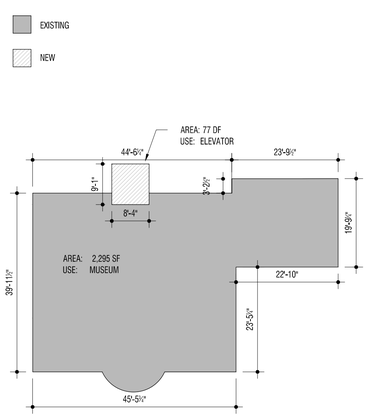

4 THIRD FLOOR PLAN
1/16" = 1'-0"

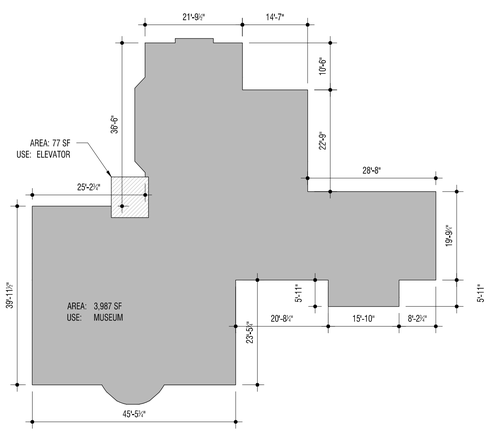

3 SECOND FLOOR PLAN
1/16" = 1'-0"

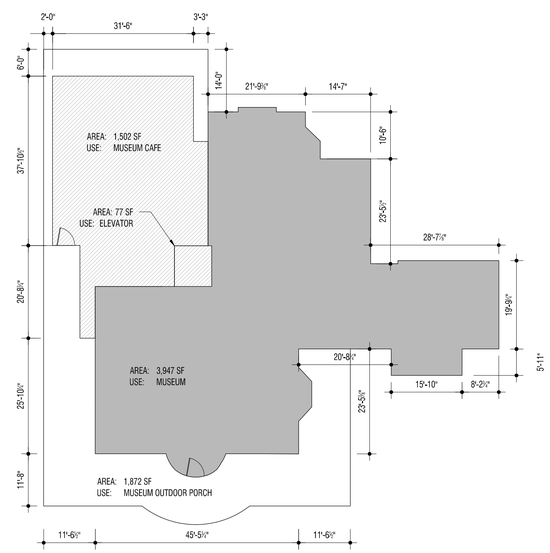

2 FIRST FLOOR PLAN
1/16" = 1'-0"

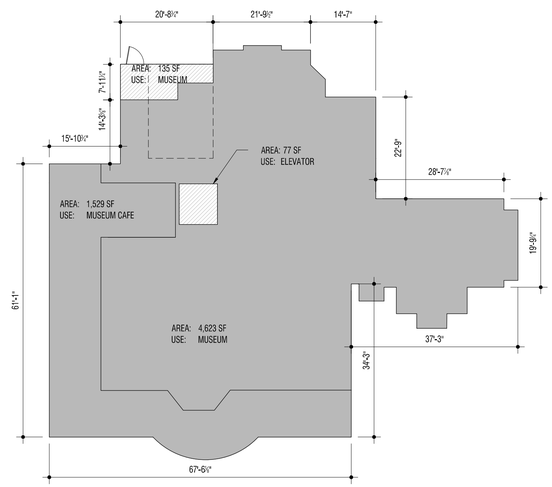

1 BASEMENT PLAN
1/16" = 1'-0"

M A T T H E W B A I R D A R C H I T E C T S
277 Broadway, 16th Floor
New York, NY 10007
T: 212 334 2499
F: 212 285 1049

LANDSCAPE ARCHITECT:
ANDROPOGON
2209 Chestnut Street
Philadelphia, PA 19103
T: 215 487 0700

LOCAL ARCHITECT:
KRIEGER AND ASSOCIATES
14 W Highland Avenue
Philadelphia, PA 19118
T: 215 247 2020

CIVIL ENGINEER:
MELIORA
259 Morgan Street
Phoenixville, PA 19460
T: 610 933 0123

ZONING CODE:
BALLARD SPAHR
1735 Market Street, 51st Floor
Philadelphia, PA 19103
T: 215 665 8500

REVISION

NO:	DATE:	REMARK:

ISSUED FOR:
ZONING PERMIT

FLOOR PLANS

PROJECT:
0224
WOODMERE ART MUSEUM
ST. MICHAEL'S HALL

9001 Germantown Ave.
Philadelphia, PA 19118

Date: APRIL 01, 2022
Scale: AS INDICATED
Dwg By: LX/NR
Proj No: 0224-SMH

SEAL + SIGNATURE:

SHEET
Z-102.00

THIS DRAWING IS THE PRODUCT OF SERVICE AND IS THE PROPERTY OF MATTHEW BAIRD ARCHITECT, PLLC. IT IS TO BE USED ONLY FOR THE PROJECT NOTED HEREIN. REUSE OF THIS DRAWING FOR ANY OTHER PROJECT OR ALTERATION OR EXTENSION OF THIS PROJECT IS PROHIBITED WITHOUT THE WRITTEN PERMISSION OF MATTHEW BAIRD ARCHITECT, PLLC. THIS DRAWING IS NOT VALID UNLESS SIGNED AND SEALED. THIS DRAWING IS ONLY VALID FOR CONSTRUCTION, BIDDING OR GOVERNMENT AGENCY REVIEW IF SAID DRAWING BEARS AN ORIGINAL STAMPING OF THE SEAL OF THE ARCHITECT WHOSE SIGNATURE APPEARS HEREON. THIS DRAWING IS ONLY VALID FOR THE PURPOSES AND PROJECT NOTED HEREIN. ALL OTHER USES ARE UNAUTHORIZED. ALL VARIATIONS OR ALTERATIONS TO THIS DRAWING OR SUBSTITUTIONS OF SUBSTANCES OR EQUIPMENT REQUIRE THE WRITTEN APPROVAL OF THE ARCHITECT.

4 SOUTH ELEVATION
1/8" = 1'-0"

3 EAST ELEVATION
1/8" = 1'-0"

2 NORTH ELEVATION
1/8" = 1'-0"

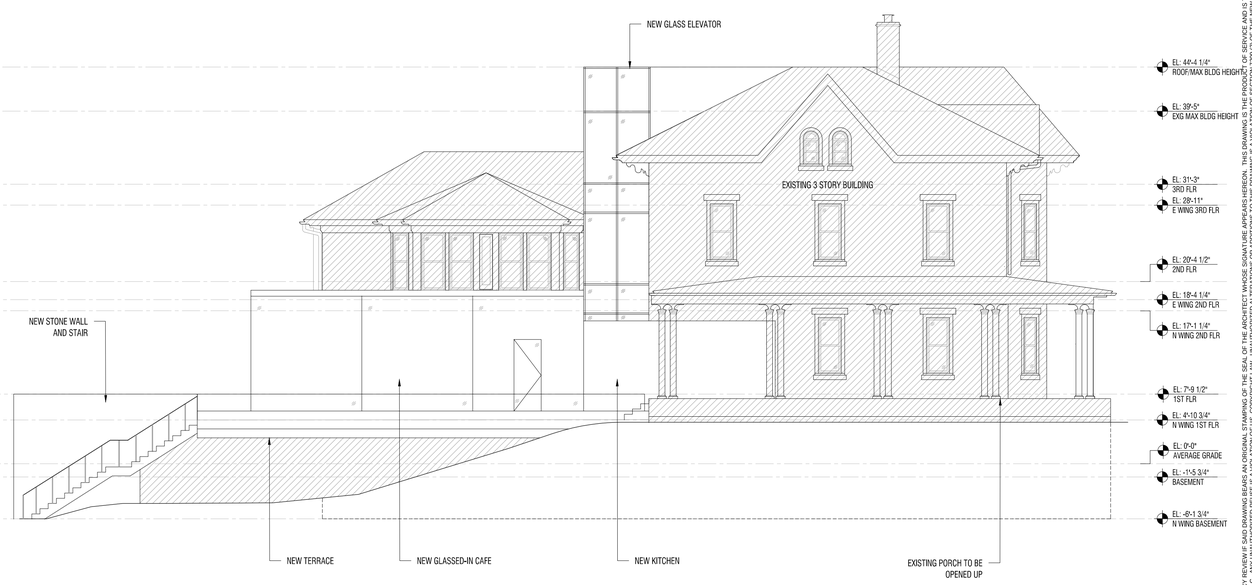

1 WEST ELEVATION
1/8" = 1'-0"

NEW ADDITION

EXISTING

MATTHEW BAIRD ARCHITECTS
277 Broadway, 10th floor
New York, NY 10007
T: 212 334 2699
F: 212 285 1049

LANDSCAPE ARCHITECT:
ANDROPOGON
2209 Chestnut Street
Philadelphia, PA 19103
T: 215 487 0700

LOCAL ARCHITECT:
KRIEGER AND ASSOCIATES
14 W Highland Avenue
Philadelphia, PA 19118
T: 215 247 2020

CIVIL ENGINEER:
MELIORA
259 Morgan Street
Phoenixville, PA 19460
T: 610 933 0123

ZONING CODE:
BALLARD SPAHR
1735 Market Street, 51st Floor
Philadelphia, PA 19103
T: 215 665 8500

REVISION

NO:	DATE:	REMARK:

ISSUED FOR:
ZONING PERMIT

MUSEUM ELEVATIONS

PROJECT:
0224
WOODMERE ART MUSEUM
ST. MICHAEL'S HALL

9001 Germantown Ave.
Philadelphia, PA 19118

Date: APRIL 01, 2022
Scale: AS INDICATED
Dwg By: LX/NR
Proj No: 0224-SMH

SEAL + SIGNATURE:

Z-103.00
SHEET

THIS DRAWING IS ONLY VALID FOR CONSTRUCTION, BIDDING OR GOVERNMENT AGENCY REVIEW IF SAID DRAWING BEARS AN ORIGINAL STAMPING OF THE SEAL OF THE ARCHITECT WHOSE SIGNATURE APPEARS HEREON. THIS DRAWING IS THE PROPERTY OF SERVICE AND IS THE PROPERTY OF MATTHEW BAIRD ARCHITECT, PLLC. IT IS TO BE USED ONLY FOR THE PROJECT NOTED HEREIN. REUSE OF THIS DRAWING FOR ANY PART THEREOF FOR ANY OTHER PROJECT OR ALTERATION OR EXTENSION OF THIS PROJECT IS PROHIBITED WITHOUT THE WRITTEN PERMISSION OF MATTHEW BAIRD ARCHITECT, PLLC. ALL VISUAL REPRODUCTIONS OF ARCHITECTURAL DRAWINGS OR MODELS ARE PROTECTED BY THE DRAWINGS AS A VIOLATION OF SECTION 2290 OF THE NEW YORK CIVIL RIGHTS LAW.

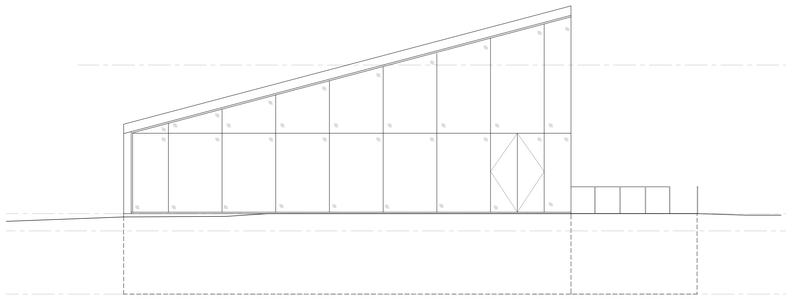

4 SOUTH ELEVATION
1/8" = 1'-0"

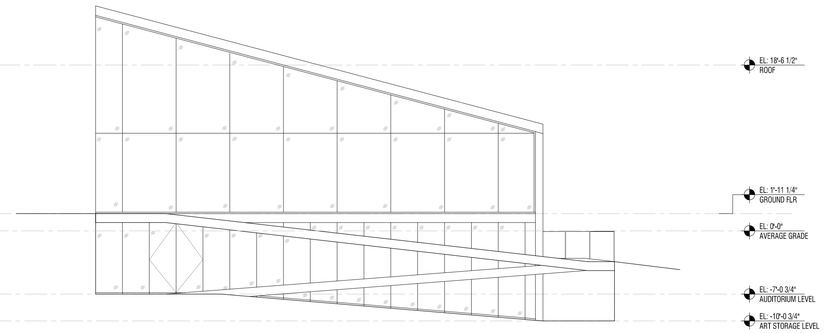

3 EAST ELEVATION
1/8" = 1'-0"

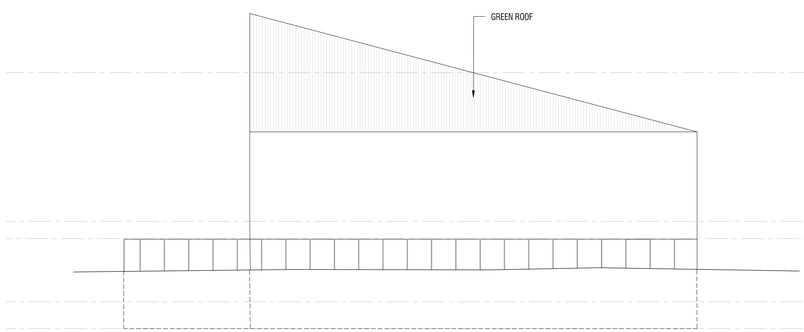

2 NORTH ELEVATION
1/8" = 1'-0"

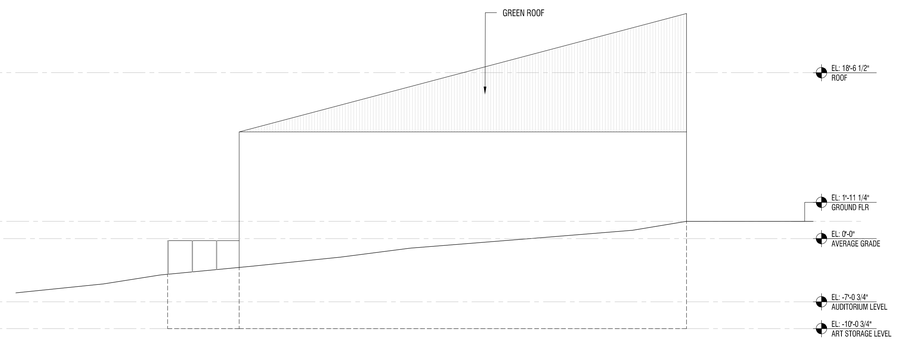

1 WEST ELEVATION
1/8" = 1'-0"

THIS DRAWING IS ONLY VALID FOR CONSTRUCTION, BIDDING OR GOVERNMENT AGENCY REVIEW IF SAID DRAWING BEARS AN ORIGINAL STAMPING OF THE SEAL OF THE ARCHITECT WHOSE SIGNATURE APPEARS HEREON. THIS DRAWING IS THE PRODUCT OF SERVICE AND IS THE PROPERTY OF MATTHEW BAIRD ARCHITECT, PLLC. IT IS TO BE USED ONLY FOR THE PROJECT NOTED HEREIN. REUSE OF THIS DRAWING FOR ANY OTHER PROJECT OR ALTERATION OR EXTENSION OF THIS PROJECT IS PROHIBITED WITHOUT THE WRITTEN PERMISSION OF MATTHEW BAIRD ARCHITECT, PLLC AND WITHOUT ADDITIONAL COMPENSATION. THIS DRAWING IS A VISUALIZATION OF SECTION 1209.1(3) OF THE INTERNATIONAL BUILDING CODE (IBC).

M A T T H E W B A I R D A R C H I T E C T S
277 Broadway, 16th Floor
New York, NY 10007
T: 212 334 2499
F: 212 285 1049

LANDSCAPE ARCHITECT:
ANDROPOGON
2209 Chestnut Street
Philadelphia, PA 19103
T: 215 487 0700

LOCAL ARCHITECT:
KRIEGER AND ASSOCIATES
14 W Highland Avenue
Philadelphia, PA 19118
T: 215 247 2020

CIVIL ENGINEER:
MELIORA
259 Morgan Street
Phoenixville, PA 19460
T: 610 933 0123

ZONING CODE:
BALLARD SPAHR
1735 Market Street, 51st Floor
Philadelphia, PA 19103
T: 215 665 8500

REVISION

NO:	DATE:	REMARK:

ISSUED FOR:
ZONING PERMIT

AUDITORIUM ELEVATIONS

PROJECT:
0224
WOODMERE ART MUSEUM
ST. MICHAEL'S HALL

9001 Germantown Ave.
Philadelphia, PA 19118

Date: APRIL 01, 2022
Scale: AS INDICATED
Dwg By: LX/NR
Proj No: 0224-SMH

SEAL + SIGNATURE:

Z-104.00
SHEET

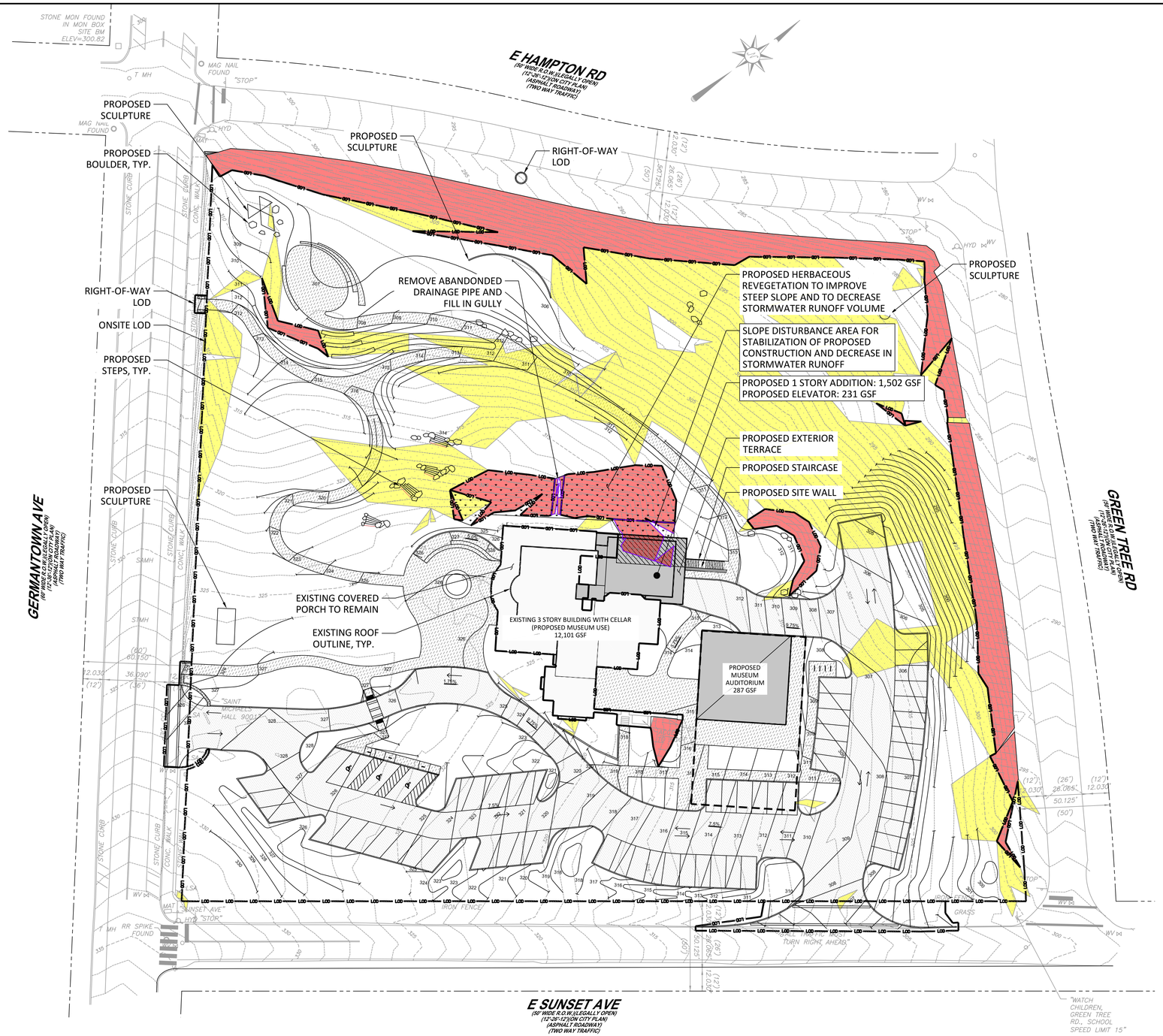

SITE SUMMARY
ZONING DISTRTICT: RSD-3 RESIDENTIAL/RESIDENTIAL MIXED USE
OVERLAYS:
WWO WISSAHICKON WATERSHED: CATEGORY 3
OPEN SPACE AND NATURAL RESOURCES - STEEP SLOPE PROTECTION
EDO EIGHTH DISTRICT OVERLAY

FLOODPLAIN:
ENTIRE SITE IS LOCATED IN FLOOD ZONE "X" AREAS DETERMINED TO BE OUTSIDE THE 0.2% ANNUAL CHANCE FLOODPLAIN. PER FEMA FLOOD INSURANCE RATE MAP (FIRM) OF PHILADELPHIA COUNTY, MAP # 4207570079G, REVISED 1/17/2007.

GEOLOGIC FORMATIONS:
AS DERIVED FROM THE GEOLOGIC MAP OF THE FRANKFORD AND FERMANTOWN QUADRANGLES, PHILADELPHIA AND MONTGOMERY COUNTIES, PENNSYLVANIA AND BURLINGTON COUNTY, NEW JERSEY DATED 2000. THE SUBJECT TRACT HAS BEEN DETERMINED TO CONTAIN THE FOLLOWING FORMATIONS:
WISSAHICKON FORMATION (CAMBRIAN AND LATE PROTEROZOIC)

SOILS

SOILS DATA SHOWN HEREON TAKEN FROM THE SOIL SURVEY GEOGRAPHIC (SSURGO) DATABASE FOR PHILADELPHIA COUNTY, PENNSYLVANIA, AS PREPARED FOR THE U.S. DEPARTMENT OF AGRICULTURE, NATURAL RESOURCES CONSERVATION SERVICE, DATED SEPTEMBER 1, 2021. THE SOIL ON-SITE INCULDE:

UdB - URBAN LAND - CHESTER COMPLEX (0-8% SLOPES); HSG B
UdC - URBAN LAND - CHESTER COMPLEX (8-15% SLOPES); HSG B

LEGEND
- LIMIT OF DISTURBANCE
- EXISTING BUILDING
- PROPOSED BUILDING
- PROPOSED BUILDING OUTLINE BELOW GRADE
- PROPOSED STRUCTURE
- PORTION OF PROPOSED BUILDING CANTILEVERED OVER STEEP SLOPE
- PROPOSED PARKING LOT
- PROPOSED WALKWAY
- RELOCATED MASONRY WALL
- PROPOSED HERBACEOUS REVEGETATION
- SLOPES 15-25%
- SLOPES >25%
- SLOPE DISTURBANCE AREA
- 414 PROPOSED CONTOUR
- 414 EXISTING CONTOUR
- PROPERTY/ROW LINE

NOTE
1. PROPOSED EARTH DISTURBANCE WILL NOT RESULT IN ANY OF THE FOLLOWING:
   1.a. AN INCREASE IN STORMWATER RUNOFF
   1.b. THE SHIFTING OF EARTH TO ADJACENT EXISTING BUILDINGS AND STRUCTURES DOWN SLOPE OR IMMEDIATELY UPSLOPE
   1.c. AN INCREASE IN THE LIKELIHOOD OF THE LOSS OF PROPERTY

GENERAL NOTES:
1. TOPOGRAPHY AND EXISING FEATURES SHOWN FROM ACTUAL FIELD SURVEY PERFORMED BY ASH ASSOCIATES DURING JULY 2020 AND A RESURVEY OF GRADED AREAS ON MARCH 2022.
2. BOUNDARY INFORMATION SHOWN IS CALCULATED FROM FIELD SURVEYED BOUNDARY CORNER EVIDENCE, PLANS AND DEEDS OF RECORD
3. RIGHT-OF-WAY WIDTHS SHOWN PER CITY PLANS.
4. BOTH PHILADELPHIA DISTRICT STANDARD FEET AND U.S. STANDARD FEET ARE SHOWN. 100.00' DISTRICT STANDARD = 100.250' U.S. STANDARD. DISTANCES INDICATED BY PARENTHESIS ( ) ARE PHILADELPHIA DISTRICT STANDARD FEET.
5. THIS PLAN WAS MADE AS PER INSTRUCTIONS OF APPLICANT AND IN CONJUNCTION WITH TITLE COMMITMENT PREPARED BY FIRST AMERICAN TITLE INSURANCE COMPANY, FILE NO. NCS-1021529-PHIL, COMMITMENT DATE JULY 10, 2020.
6. BUILDING DIMENSIONS ARE EXTERIOR AND MAY INCLUDE COVERED ENTRANCES AND ORNAMENTAL FACADES.
7. HORIZONTAL DATUM BASED ON THE STATE PLANE COORDINATE SYSTEM FOR PENNSYLVANIA.
8. VERTICAL DATUM BASED ON CITY DATUM PER CITY PLANS.
9. SITE BENCH MARK: STONE MONUMENT AT THE NORTHWESTERLY CORNER OF INTERSECTION OF GERMANTOWN PIKE AND HAMPTON ROAD. BM ELEV=300.82.
10. SITE IS LOCATED WITHIN FLOOD ZONE X (UNSHADED). AREAS DETERMINED TO BE OUTSIDE OF THE 0.2% ANNUAL CHANCE FLOOD. PER FLOOD INSURANCE RATE MAP# 4207570079G (NOT PRINTED) FOR THE CITY OF PHILADELPHIA, PREPARED BY THE FEDERAL EMERGENCY MANAGEMENT AGENCY, LAST REVISED JANUARY 17, 2007.
11. THERE IS NO VISIBLE EVIDENCE OF SITE BEING USED AS A SOLID WASTE DUMP OR LANDFILL.
12. THIS PLAN DOES NOT SHOW ENVIRONMENTAL HAZARDS, WETLANDS, ARCHEOLOGICAL SITES OR FLOOD PRONE AREAS THAT MAY EXIST ON SITE.

NOTES:
1. PROPERTY ENCOMPASSES ENTIRE BLOCK AND THEREFORE NO OTHER BUILDINGS ARE ON THIS BLOCK.
2. NO LOT ADJUSTMENTS OR SUBDIVISION ARE BEING PROPOSED.
3. ALL EXISTING STREET FURNITURE IS SHOWN.
4. A PORTION OF THE EXISTING BUILDING ALONG THE NORTH EDGE IS LOCATED CLOSE TO SLOPES >25%. THE PROPOSED ADDITION CALLS FOR A CANTILEVER STRUCTURE OVER THIS AREA. AN AREA OF THESE SLOPES AS OUTLINED IN THE PLAN IS TO BE DISTURBED FOR PROPOSED CONSTRUCTION AND DECREASE IN STORMWATER RUNOFF. ADDITIONALLY, A PORTION OF THE STEEP SLOPES BY THE EXISTING BUILDING IS TO BE DISTURBED TO REMOVE ABANDONED PIPE AND STABILIZE THE EXISTING EXPOSED SWALE.
5. A PROPOSED HERBACEOUS REVEGETATION OF A PORTION OF THE EXISTING STEEP SLOPES IS TO IMPROVE SLOPE STABILIZATION AND DECREASE THE STORMWATER RUNOFF VOLUME.
6. ALL DEDICATED RIGHT-OF-WAYS SHOWN. THERE ARE NO NON-DEDICATED RIGHT-OF-WAYS.
7. ALL NEAREST INTERSECTIONS SHOWN.
8. NEAREST STREAM IS WISSAHICKON CREEK 1950 FT AWAY AT ITS CLOSEST APPROACH.

COVERAGE SUMMARY

COVERAGE TYPE	AREA		SITE %
TOTAL PROPERTY	171541 SF	3.94 AC	100%
EXISTING IMPERVIOUS	21995 SF	0.50 AC	12.8%
PROPOSED IMPERVIOUS	56381 SF	1.29 AC	32.9%
CHANGE IN IMPERVIOUS	34386 SF	0.79 AC	20.0%
MAX. IMPERVIOUS*	60039 SF	1.38 AC	35.0%
EXISTING PERVIOUS	149546 SF	3.44 AC	87.2%
PROPOSED PERVIOUS	115160 SF	2.65 AC	67.1%
CHANGE IN PERVIOUS	-34386 SF	-0.79 AC	-20.0%

MAX. IMPERVIOUS COVER GOVERNED BY REQUIREMENTS OF WISSAHICKON WATERSHED OVERLAY: CATEGORY 3.

30 0 30 60
1 INCH = 30 FEET

MATTHEW BAIRD ARCHITECTS
277 Broadway, 10th Floor
New York, NY 10007
T: 212.334.2499
F: 212.285.1049

LANDSCAPE ARCHITECT:
ANDROPOGON
2209 Chestnut Street
Philadelphia, PA 19103
T: 215 487 0700

LOCAL ARCHITECT:
KRIEGER AND ASSOCIATES
14 W Highland Avenue
Philadelphia, PA 19118
T: 215 247 2020

CIVIL ENGINEER:
MELIORA
259 Morgan Street
Phoenixville, PA 19460
T: 610 933 0123

ZONING CODE:
BALLARD SPAHR
1735 Market Street, 51st Floor
Philadelphia, PA 19103
T: 215 665 8500

REVISION
NO: DATE: REMARK:

ISSUED FOR:
ZONING PERMIT

EARTH MOVE PLAN

PROJECT:
0224
WOODMERE ART MUSEUM
ST. MICHAEL'S HALL
9001 Germantown Ave.
Philadelphia, PA 19118

Date: APRIL 22, 2022
Scale: 1" = 30'
Dwg By: MD/AM
Proj No: 0224-SMH

SEAL + SIGNATURE:
COMMONWEALTH OF PENNSYLVANIA
REGISTERED PROFESSIONAL
ALTUE M MACY
ARCHITECT No. RA089399

Z-105
SHEET # OF #

THIS DRAWING IS ONLY VALID FOR CONSTRUCTION, BIDDING OR GOVERNMENT AGENCY REVIEW IF SAID DRAWING BEARS AN ORIGINAL STAMPING OF THE SEAL OF THE ARCHITECT WHOSE SIGNATURE APPEARS HEREON. THIS DRAWING IS THE PRODUCT OF SERVICE AND IS THE PROPERTY OF MATTHEW BAIRD ARCHITECT PLLC. IT IS TO BE USED ONLY FOR THE PROJECT NOTED HEREIN. REUSE OF THIS DRAWING FOR ANY OTHER PROJECT OR ALTERATION OR EXTENSION OF THIS PROJECT IS PROHIBITED WITHOUT THE WRITTEN PERMISSION OF MATTHEW BAIRD ARCHITECT PLLC. ANY UNAUTHORIZED REUSE IS A VIOLATION OF US COPYRIGHT LAW. UNAUTHORIZED ALTERATIONS OR ADDITIONS TO THIS DRAWING IS A VIOLATION OF SECTION 7209 OF THE NEW YORK STATE EDUCATION LAW.

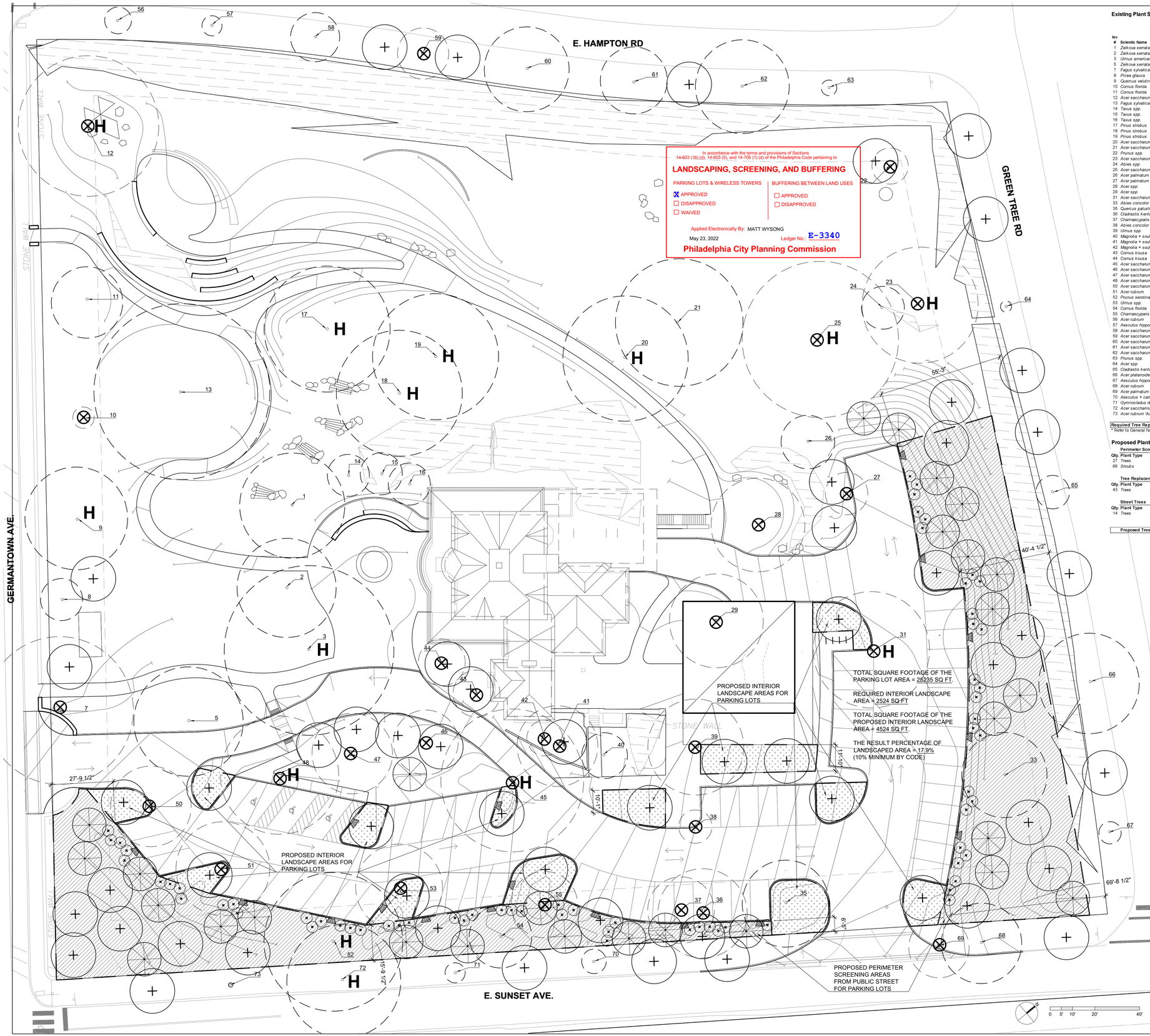

Existing Plant Schedule

Inv #	Scientic Name	Common Name	Sprd (ft)	Ht (ft)	Equi diameter (inch)	To remain	Removal due to health concern	Removal due to site improvements	Tree removal inches	Heritage Tree	Removal per Code §14-705(1)(e)(.1)(.b)(i) *
1	*Zelkova serrata*	Zelkova	47	50	29.9	x					
2	*Zelkova serrata*	Zelkova	45	50	26.7	x					
3	*Ulmus americana*	American Elm	76	80	41.4	x				x	
5	*Zelkova serrata*	Zelkova	49	55	23.2	x					
7	*Fagus sylvatica*	Purple European Beech	65	85	50.0		x				
8	*Picea glauca*	White Spruce	17	45	14.3	x					
9	*Quercus velutina*	Black Oak	46	50	28.0	x				x	
10	*Cornus florida*	Flowering Dogwood	-	-	11.5		x				
11	*Cornus florida*	Flowering Dogwood	32	25	14.3	x					
12	*Acer saccharum*	Sugar Maple	63	90	57.3		x			x	x
13	*Fagus sylvatica*	European Beech	79	85	53.5	x					
14	*Taxus spp.*	Yew	19			x					
15	*Taxus spp.*	Yew	19			x					
16	*Taxus spp.*	Yew	19			x					
17	*Pinus strobus*	White Pine	56	50	32.5	x				x	
18	*Pinus strobus*	White Pine	55	60	26.4	x				x	
19	*Pinus strobus*	White Pine	57	55	31.5	x				x	
20	*Acer saccharum*	Sugar Maple	56	55	26.7	x				x	
21	*Acer saccharum*	Sugar Maple	57	50	23.6	x					
22	*Prunus spp.*	Cherry	16	15	13.7		x				
23	*Acer saccharum*	Sugar Maple	52	85	31.5		x			x	x
24	*Abies spp.*	Fir	17	35	13.1	x					
25	*Acer saccharum*	Sugar Maple	70	80	40.7		x			x	x
26	*Acer palmatum*	Japanese Maple	24	15	14.9	x					
27	*Acer palmatum*	Japanese Maple	19	13	13.1			x	13.1		
28	*Acer spp.*	Maple spp.	42	40	22.9			x	22.9		
29	*Acer spp.*	Maple spp.	42	35	20.4			x	20.4		
31	*Acer saccharum*	Sugar Maple	52	60	40.1		x			x	x
33	*Abies concolor*	Concolor Fir	36	60	22.9	x					
35	*Quercus palustris*	Pin Oak	39	65	22.0	x					
36	*Cladrastis kentuckea*	Yellow Wood	40	40	16.9			x	16.9		
37	*Chamaecyparis pisifera*	Sawara Cypress	27	60	26.7			x	26.7		
38	*Abies concolor*	White Fir	14	40	13.7			x	13.7		
39	*Ulmus spp.*	Elm spp.	43	40	16.6			x	16.6		
40	*Magnolia x soulangiana*	Saucer Magnolia	21	15	10.1	x					
41	*Magnolia x soulangiana*	Saucer Magnolia	37	40	16.2		x				
42	*Magnolia x soulangiana*	Saucer Magnolia	16	30	8.3		x				
43	*Cornus kousa*	Kousa Dogwood	21	20	6.4			x	6.4		
44	*Cornus kousa*	Kousa Dogwood	21	20	7.0			x	7.0		
45	*Acer saccharum*	Sugar Maple	64	80	34.4		x			x	x
46	*Acer saccharum*	Sugar Maple	29	40	10.8			x	10.8		
47	*Acer saccharum*	Sugar Maple	36	40	10.8			x	10.8		
48	*Acer saccharum*	Sugar Maple	53	95	33.1		x			x	x
50	*Acer saccharum*	Sugar Maple	36	45	14.0			x	14		
51	*Acer rubrum*	Red Maple	42	50	20.7			x	20.7		
52	*Prunus serotina*	Wild Black Cherry	62	75	33.7	x				x	
53	*Ulmus spp.*	Elm spp.	39	45	15.0			x	15		
54	*Cornus florida*	Flowering Dogwood	28	30	13.7	x					
55	*Chamaecyparis pisifera 'Filifera'*	Threadleaf Sawara Cypress	31	50	28.6			x	28.6		
56	*Acer rubrum*	Red Maple	12	17	3.8	x					
57	*Aesculus hippocastanum*	Horse Chestnut	9	14	3.2	x					
58	*Acer saccharum*	Sugar Maple	22	35	10.8	x					
59	*Acer saccharum*	Sugar Maple	23	35	9.9		x				
60	*Acer saccharum*	Sugar Maple	38	45	15.6	x					
61	*Acer saccharum*	Sugar Maple	30	40	15.3	x					
62	*Acer saccharum cv.*	Sugar Maple cv.	42	45	15.3	x					
63	*Prunus spp.*	Cherry spp.	7	30	5.1	x					
64	*Acer spp.*	Maple spp.	5	10	1.3	x					
65	*Cladrastis kentuckea*	Yellow Wood	15	15	4.1	x					
66	*Acer platanoides*	Norway Maple	45	55	26.7	x					
67	*Aesculus hippocastanum*	Horse Chestnut	10	11	4.5	x					
68	*Acer rubrum*	Red Maple	36	50	21.0	x					
69	*Acer palmatum*	Japanese Maple	27	30	17.5	x					
70	*Aesculus x camea 'Briotii'*	Red Horse Chestnut?	11	10	3.8	x					
71	*Gymnocladus dioicus*	Kentucky Coffeetree	9	19	3.2	x					
72	*Acer saccharinum*	Silver Maple	51	60	28.3	x				x	
73	*Acer rubrum 'Autumn Flame'*	Red Maple 'Autumn Flame'	2	5	0.3	x					

Required Tree Replacement Total (inches): 243.6

* Refer to General Notes 2 for the Detail of "Removal per Code §14-705(1)(e)(.1)(.b)(i)".

Proposed Plant Schedule

Perimeter Screening & Interior Landscape Requirements for Parking Lots

Qty.	Plant Type	Size	Total Cal. Inches
27	*Trees*	3.5" Cal.	94.5
66	*Shrubs*	2'-3' ht.	

Tree Replacement Requirements

Qty.	Plant Type	Size	Total Cal. Inches
43	*Trees*	3.5" Cal.	151

Street Trees

Qty.	Plant Type	Size	Total Cal. Inches
14	*Trees*	3.5" Cal.	N/A

Proposed Tree Replacement Total (inches): 245

LEGEND

- EXISTING HERITAGE TREE TO REMAIN
- EXISTING TREE TO REMAIN
- EXISTING HERITAGE TREE REMOVAL PER CODE §14-705(1)(E)(.1)(.B)(I) *
- EXISTING TREE TO BE REMOVED
- PROPOSED DECIDUOUS TREE
- PROPOSED EVERGREEN TREE
- PROPOSED SHRUBS
- PROPOSED PERIMETER SCREENING AREAS FROM PUBLIC STREET FOR PARKING LOTS
- PROPOSED INTERIOR LANDSCAPE AREAS FOR PARKING LOTS

GENERAL NOTES

1. TREE MANAGEMENT PLAN AND RECOMMENDATIONS HAVE BEEN PROVIDED BY: MORRIS ARBORETUM'S URBAN FORESTRY CONSULTANTS. 100 EAST NORTHWESTERN AVENUE, PHILADELPHIA, PENNSYLVANIA 19118
2. CODE §14-705(1)(E)(.1)(.B)(I) * STATES: A HERITAGE TREE MAY BE REMOVED FROM A PROPERTY PROVIDED… A CERTIFIED ARBORIST HAS DETERMINED THAT THE TREE IS DEAD, DAMAGED, DISEASED, OR A THREAT TO PUBLIC HEALTH OR SAFETY. PURSUANT TO CODE SECTION 14-705(1)(E)(.1)(.B)(I), A CERTIFIED ARBORIST DETERMINED THAT CERTAIN TREES (AS NOTED ABOVE) ARE DEAD, DAMAGED, DISEASED, OR A THREAT TO PUBLIC HEALTH OR SAFETY.
3. IN PROPOSED INTERIOR LANDSCAPE AREAS FOR PARKING LOTS: ONE TREE IS PLANTED PER 300 SQ FT OF INTERIOR LANDSCAPE AREA. REQUIRED INTERIOR LANDSCAPE AREA = 2524 SQ FT; REQUIRED NUMBER OF TREES PROVIDED = 9.
4. IN PROPOSED PERIMETER SCREENING AREAS FROM PUBLIC STREET FOR PARKING LOTS: (1) TREES ARE PROVIDED WITHIN THE REQUIRED LANDSCAPED AREA AT A RATE OF AT LEAST ONE TREE PER 35 FT. OF LINEAR FRONTAGE. (2) SHRUBS ARE PLANTED AT AN INTERVAL OF THREE SHRUBS PER 25 FT. OF LINEAR FRONTAGE AND HAVE A MATURE HEIGHT OF TWO FT. LINEAR FOOTAGE OF PARKING LOT STREET FRONTAGE TO BE SCREENED =537 FT. REQUIRED NUMBER OF TREES PROVIDED FOR SCREENING = 9; REQUIRED NUMBER OF SHRUBS PROVIDED FOR SCREENING = 65.

MATTHEW BAIRD ARCHITECTS
277 Broadway, 16th Floor
New York, NY 10007
T: 212.334.2499
F: 212.285.1049

LANDSCAPE ARCHITECT:
ANDROPOGON
2209 Chestnut Street
Philadelphia, PA 19103
T: 215 487 0700

LOCAL ARCHITECT:
KRIEGER AND ASSOCIATES
14 W Highland Avenue
Philadelphia, PA 19118
T: 215 247 2020

CIVIL ENGINEER:
MELIORA
259 Morgan Street
Phoenixville, PA 19460
T: 610 933 0123

ZONING CODE:
BALLARD SPAHR
1735 Market Street, 51st Floor
Philadelphia, PA 19103
T: 215 665 8500

REVISION

NO:	DATE:	REMARK:

ISSUED FOR:
ZONING PERMIT

PROJECT:
0224
WOODMERE ART MUSEUM
ST. MICHAEL'S HALL

9001 Germantown Ave.
Philadelphia, PA 19118

Date: APRIL 22, 2022
Scale: AS INDICATED
Dwg By: LX,DD,TM
Proj No: 0224-SMH

SEAL + SIGNATURE:

PENNSYLVANIA REGISTERED LANDSCAPE ARCHITECT

Z-106

SHEET 6 OF 6

THIS DRAWING IS THE PROPERTY OF MATTHEW BAIRD ARCHITECT, PLLC. IT IS TO BE USED ONLY FOR THE PROJECT NOTED HEREIN. REUSE OF THIS DRAWING FOR ANY PART THEREOF FOR ANY OTHER PROJECT OR ALTERATION OR EXTENSION OF THIS PROJECT IS PROHIBITED WITHOUT THE WRITTEN PERMISSION OF MATTHEW BAIRD ARCHITECT, PLLC. THIS DRAWING IS THE PRODUCT OF SERVICE AND IS THE PROPERTY OF THE ARCHITECT WHOSE SIGNATURE APPEARS HEREON. THIS DRAWING IS AN INSTRUMENT OF SERVICE AS DEFINED BY U.S. COPYRIGHT LAWS. UNAUTHORIZED ALTERATIONS OR ADDITIONS TO THIS DRAWING IS A VIOLATION OF SECTION 2020 (2) OF THE NEW YORK STATE EDUCATION LAWS.
THIS DRAWING IS ONLY VALID FOR CONSTRUCTION, BIDDING OR GOVERNMENT AGENCY REVIEW IF SAID DRAWING BEARS AN ORIGINAL STAMPING OF THE SEAL OF THE ARCHITECT WHOSE SIGNATURE APPEARS HEREON. ELECTRONIC OR PHOTOCOPIED REPRODUCTIONS OF THIS DRAWING ARE NOT VALID.

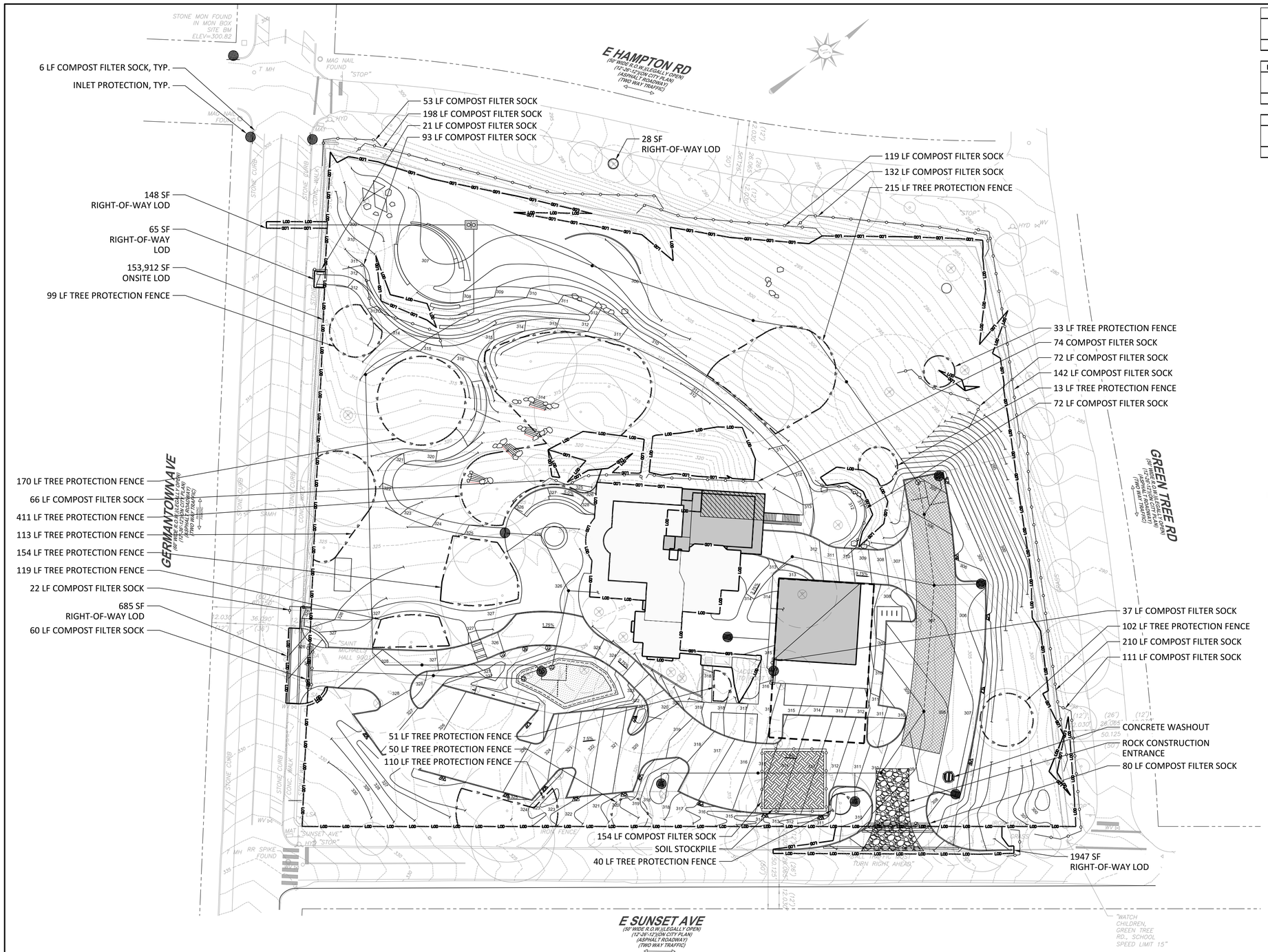

LOD	AREA (SF)	AREA (AC)
ON-SITE	153,912	3.53
ROW	2,873	0.07
TOTAL	**156,785**	**3.60**

EXISTING COVER CONDITIONS	AREA (SF)	AREA (AC)
IMPERVIOUS (ON-SITE)	22,570	0.52
PERVIOUS (ON-SITE)	131,342	3.02
TOTAL (ON-SITE)	**153,912**	**3.53**

PROPOSED COVER	AREA (SF)	AREA (AC)
IMPERVIOUS (ON-SITE)	47,082	1.08
PERVIOUS (ON-SITE)	106,830	2.45
TOTAL (ON-SITE)	**153,912**	**3.53**

LEGEND

- LIMIT OF DISTURBANCE
- TREE PROTECTION
- COMPOST SOCK
- ROCK CONSTRUCTION ENTRANCE
- SOIL STOCKPILE AREA
- CONCRETE WASHOUT
- INLET BAG PROTECTION
- EXISTING BUILDING
- PROPOSED BUILDING
- PROPOSED BUILDING OUTLINE BELOW GRADE
- PROPOSED STRUCTURE
- PORTION OF PROPOSED BUILDING CANTILEVERED OVER STEEP SLOPE
- RAIN GARDEN
- INFILTRATION BED
- PROPOSED CONTOUR
- EXISTING CONTOUR
- PROPERTY/ROW LINE

NOTE

1. PROPOSED EARTH DISTURBANCE WILL NOT RESULT IN ANY OF THE FOLLOWING:
   - 1.a. AN INCREASE IN STORMWATER RUNOFF
   - 1.b. THE SHIFTING OF EARTH TO ADJACENT EXISTING BUILDINGS AND STRUCTURES DOWN SLOPE OR IMMEDIATELY UPSLOPE
   - 1.c. AN INCREASE IN THE LIKELIHOOD OF THE LOSS OF PROPERTY

In accordance with the terms and provisions of Section 14-704 (2) of the Philadelphia Code pertaining to

STEEP SLOPE PROTECTION

- ☐ APPROVED
- ☒ DISAPPROVED
- ☐ NOT APPLICABLE (< 15% slope OR < 1,400 sq. ft. disturbance)
- ☒ EARTH MOVING PLAN SUBMITTED WITH THIS APPLICATION

Applied Electronically By: MATT WYSONG

May 23, 2022 Ledger No.: E-3340

Philadelphia City Planning Commission

In accordance with the terms and provisions of Section 14-510 of the Philadelphia Code pertaining to the

WISSAHICKON WATERSHED OVERLAY DISTRICT

IMPERVIOUS COVERAGE CATEGORY: 3

- ☒ APPROVED
- ☐ DISAPPROVED
- ☒ EARTH MOVING PLAN SUBMITTED WITH THIS APPLICATION

Applied Electronically By: MATT WYSONG

May 23, 2022 Ledger No.: E-3340

Philadelphia City Planning Commission

30 0 30 60

1 INCH = 30 FEET

MATTHEW BAIRD ARCHITECTS
277 Broadway, 10th Floor
New York, NY 10007
T: 212.334.2499
F: 212.285.1049

LANDSCAPE ARCHITECT:
ANDROPOGON
2209 Chestnut Street
Philadelphia, PA 19103
T: 215 487 0700

LOCAL ARCHITECT:
KRIEGER AND ASSOCIATES
14 W Highland Avenue
Philadelphia, PA 19118
T: 215 247 2020

CIVIL ENGINEER:
MELIORA
259 Morgan Street
Phoenixville, PA 19460
T: 610 933 0123

ZONING CODE:
BALLARD SPAHR
1735 Market Street, 51st Floor
Philadelphia, PA 19103
T: 215 665 8500

REVISION

NO:	DATE:	REMARK:

ISSUED FOR:
ZONING PERMIT

EROSION AND SEDIMENT CONTROL PLAN

PROJECT:
0224
WOODMERE ART MUSEUM
ST. MICHAEL'S HALL

9001 Germantown Ave.
Philadelphia, PA 19118

Date: APRIL 22, 2022
Scale: 1" = 30'
Dwg By: MD/AM
Proj No: 0224-SMH

SEAL + SIGNATURE:

COMMONWEALTH OF PENNSYLVANIA
REGISTERED PROFESSIONAL
ALTJE M MACY
ARCHITECT No. RA089399

1

THIS DRAWING IS ONLY VALID FOR CONSTRUCTION, BIDDING OR GOVERNMENT AGENCY REVIEW IF SAID DRAWING BEARS AN ORIGINAL STAMPING OF THE SEAL OF THE ARCHITECT WHOSE SIGNATURE APPEARS HEREON. THIS DRAWING IS THE PRODUCT OF SERVICE AND IS THE PROPERTY OF MATTHEW BAIRD ARCHITECT PLLC. IT IS TO BE USED ONLY FOR THE PROJECT NOTED HEREIN. REUSE OF THIS DRAWING FOR ANY OTHER PROJECT OR ALTERATION OR EXTENSION OF THIS PROJECT IS PROHIBITED WITHOUT THE WRITTEN PERMISSION OF MATTHEW BAIRD ARCHITECT PLLC. ANY UNAUTHORIZED REUSE IS A VIOLATION OF US COPYRIGHT LAW. UNAUTHORIZED ALTERATIONS OR ADDITIONS TO THIS DRAWING IS A VIOLATION OF SECTION 7209 OF THE NEW YORK STATE EDUCATION LAW.

PWD STANDARD EROSION AND SEDIMENT CONTROL NOTES

1. AN INDUSTRIAL WASTE PERMIT WILL BE REQUIRED SHOULD PUMPING TO CITY-OWNED INFRASTRUCTURE BECOME NECESSARY DURING CONSTRUCTION. ALL PUMPING OF WATER FROM ANY WORK AREA SHALL BE DONE ACCORDING TO THE PROCEDURE DESCRIBED IN THIS PLAN, OVER UNDISTURBED VEGETATED AREAS.
2. INLET PROTECTION SHOULD BE PROVIDED FOR ALL INLETS OWNED BY PWD THAT ARE LOCATED WITHIN ONE BLOCK OF THE PROJECT SITE.
3. PWD IS NOT RESPONSIBLE FOR ANY CLEANING OR REPAIRS NEEDED ON CITY-OWNED INFRASTRUCTURE DUE TO FAILURE OF ANY EROSION AND SEDIMENT CONTROL PRACTICES. CONTRACTOR IS RESPONSIBLE FOR CLEANING OR REPAIRS NEEDED ON CITY-OWNED INFRASTRUCTURE DUE TO FAILURE OF ANY EROSION AND SEDIMENT CONTROL PRACTICES.
4. INSPECTION AND MAINTENANCE OF ALL EROSION AND SEDIMENT CONTROL BEST MANAGEMENT PRACTICES SHALL OCCUR ON A WEEKLY BASIS, BEFORE ANY ANTICIPATED PRECIPITATION EVENTS, AND AFTER ALL PRECIPITATION EVENTS.
5. THE MAXIMUM HEIGHT FOR STOCKPILES AREAS SHALL BE 20 FEET. THE MAXIMUM SIDE SLOPE FOR STOCKPILE AREAS SHALL NOT EXCEED 2:1.
6. THE ROCK CONSTRUCTION ENTRANCE THICKNESS SHALL BE CONSTANTLY MAINTAINED ON-SITE. A STOCKPILE SHALL BE MAINTAINED ON-SITE FOR THIS PURPOSE. AT THE END OF EACH CONSTRUCTION DAY, ALL SEDIMENT DEPOSITED ON PAVED ROADWAYS SHALL BE REMOVED AND RETURNED TO THE CONSTRUCTION SITE. IN NO CASE SHALL THE SEDIMENT BE WASHED, SHOVELED, OR SWEPT INTO ANY ROADSIDE DITCH, STORM SEWER, OR SURFACE WATER.
7. COMPOST SOCK SHOULD BE INSTALLED AT LEVEL GRADE. BOTH ENDS OF EACH COMPOST SOCK SECTION SHOULD BE EXTENDED AT LEAST 8 FEET UPSLOPE AT 45 DEGREES TO THE MAIN BARRIER ALIGNMENT. SUPPORT STAKES OR SAND BAGS SHALL BE SPACED AT A MAXIMUM OF 8 FEET. SEDIMENT MUST BE REMOVED WHEN ACCUMULATIONS REACH 1/2 THE ABOVE GROUND HEIGHT OF THE COMPOST SOCK.
8. ANY FENCE OR SOCK SECTION WHICH HAS BEEN UNDERMINED OR TOPPED MUST BE IMMEDIATELY REPLACED WITH A ROCK FILTER OUTLET. SEDIMENT MUST BE REMOVED WHEN ACCUMULATIONS REACH 1/3 THE HEIGHT OF THE OUTLET.
9. EROSION CONTROL BLANKETING SHALL BE INSTALLED ON ALL SLOPES 3H:1V OR STEEPER WITHIN 50 FEET OF A SURFACE WATER AND ON ALL OTHER DISTURBED AREAS SPECIFIED ON THE PLAN MAPS AND/OR DETAIL SHEETS.
10. IMMEDIATELY UPON DISCOVERING UNFORESEEN CIRCUMSTANCES POSING THE POTENTIAL FOR ACCELERATED EROSION AND/OR SEDIMENT POLLUTION, THE OPERATOR SHALL IMPLEMENT APPROPRIATE BEST MANAGEMENT PRACTICES TO MINIMIZE THE POTENTIAL FOR EROSION AND SEDIMENT POLLUTION AND NOTIFY PWD AND PA DEP.
11. UNTIL THE SITE IS STABILIZED, ALL E&S BMPS SHALL BE MAINTAINED PROPERLY. MAINTENANCE SHALL INCLUDE INSPECTIONS OF ALL E&S BMPS PRIOR TO ANY ANTICIPATED STORM EVENT, AFTER EACH RUNOFF EVENT AND ON A WEEKLY BASIS. ALL PREVENTATIVE AND REMEDIAL MAINTENANCE WORK, INCLUDING CLEAN OUT, REPAIR, REPLACEMENT, REGRADING, RESEEDING, REMULCHING, AND RENETTING, MUST BE PERFORMED IMMEDIATELY. IF THE E&S BMPS FAIL TO PERFORM AS EXPECTED, REPLACEMENT BMPS, OR MODIFICATIONS OF THOSE INSTALLED, WILL BE REQUIRED.
12. ALL EARTH DISTURBANCES, INCLUDING CLEARING AND GRUBBING, AS WELL AS CUTS AND FILLS, SHALL BE DONE IN ACCORDANCE WITH THE APPROVED E&S PLAN. A COPY OF THE APPROVED DRAWINGS MUST BE AVAILABLE AT THE PROJECT SITE AT ALL TIMES. PWD SHALL BE NOTIFIED OF ANY CHANGES TO THE APPROVED PLAN PRIOR TO IMPLEMENTATION OF THOSE CHANGES. PWD MAY REQUIRE A WRITTEN SUBMITTAL OF THOSE CHANGES FOR REVIEW AND APPROVAL AT ITS DISCRETION.
13. AT LEAST THREE (3) DAYS PRIOR TO STARTING ANY EARTH DISTURBANCE ACTIVITIES, OR EXPANDING INTO AN AREA PREVIOUSLY UNMARKED, THE PENNSYLVANIA ONE CALL SYSTEM INC. SHALL BE NOTIFIED AT 1-800-242-1776 FOR THE LOCATION OF EXISTING UNDERGROUND UTILITIES.
14. ALL EARTH DISTURBANCE ACTIVITIES SHALL PROCEED IN ACCORDANCE WITH THE SEQUENCE PROVIDED ON THE PLAN DRAWINGS. DEVIATION FROM THAT SEQUENCE MUST BE APPROVED IN WRITING BY PWD AND THE PA DEP PRIOR TO IMPLEMENTATION.
15. AREAS TO BE FILLED ARE TO BE CLEARED, GRUBBED, AND STRIPPED OF TOPSOIL TO REMOVE TREES, VEGETATION, ROOTS, AND OTHER OBJECTIONABLE MATERIAL.
16. CLEARING, GRUBBING, AND TOPSOIL STRIPPING SHALL BE LIMITED TO THOSE AREAS DESCRIBED IN EACH STAGE OF THE CONSTRUCTION SEQUENCE. GENERAL SITE CLEARING, GRUBBING, AND TOPSOIL STRIPPING MAY NOT COMMENCE IN ANY STAGE OF THE PROJECT UNTIL THE E&S BMPS SPECIFIED BY THE BMP SEQUENCE FOR THAT STAGE HAVE BEEN INSTALLED AND ARE FUNCTIONING AS DESCRIBED IN THIS E&S PLAN.
17. AT NO TIME SHALL CONSTRUCTION VEHICLES BE ALLOWED TO ENTER AREAS OUTSIDE THE LIMIT OF DISTURBANCE BOUNDARIES SHOWN ON THE PLAN MAPS. THESE AREAS MUST BE CLEARLY MARKED AND FENCED OFF BEFORE CLEARING AND GRUBBING OPERATIONS BEGIN.
18. A LOG SHOWING DATES THAT E&S BMPS WERE INSPECTED AS WELL AS ANY DEFICIENCIES FOUND AND THE DATE THEY WERE CORRECTED SHALL BE MAINTAINED ON THE SITE AND BE MADE AVAILABLE TO PWD AT THE TIME OF INSPECTION.
19. ALL SEDIMENT REMOVED FROM BMPS SHALL BE DISPOSED OF PER APPROVED METHODS DESCRIBED IN RECYCLING PROGRAM NOTES.
20. AREAS WHICH ARE TO BE TOPSOILED SHALL BE SCARIFIED TO A MINIMUM DEPTH OF THREE TO FIVE INCHES — SIX TO 12 INCHES ON COMPACTED SOILS — PRIOR TO PLACEMENT OF TOPSOIL. AREAS TO BE VEGETATED SHALL HAVE A MINIMUM FOUR INCHES OF TOPSOIL IN PLACE PRIOR TO SEEDING AND MULCHING. FILL OUTSLOPES SHALL HAVE A MINIMUM OF TWO INCHES OF TOPSOIL.
21. ALL FILLS SHALL BE COMPACTED AS REQUIRED TO REDUCE EROSION, SLIPPAGE, SETTLEMENT, SUBSIDENCE, OR OTHER RELATED PROBLEMS. FILL INTENDED TO SUPPORT BUILDINGS, STRUCTURES, AND CONDUITS, ETC. SHALL BE COMPACTED IN ACCORDANCE WITH LOCAL REQUIREMENTS OR CODES.
22. ALL EARTHEN FILLS SHALL BE PLACED IN COMPACTED LAYERS NOT TO EXCEED NINE INCHES IN THICKNESS.
23. FILL MATERIALS SHALL BE FREE OF FROZEN PARTICLES, BRUSH, ROOTS, SOD, OR OTHER FOREIGN OR OBJECTIONABLE MATERIALS THAT WOULD INTERFERE WITH OR PREVENT CONSTRUCTION OF SATISFACTORY FILLS.
24. FROZEN MATERIALS OR SOFT, MUCKY, OR HIGHLY COMPRESSIBLE MATERIALS SHALL NOT BE INCORPORATED INTO FILLS.
25. FILL SHALL NOT BE PLACED ON SATURATED OR FROZEN SURFACES.
26. SEEPS OR SPRINGS ENCOUNTERED DURING CONSTRUCTION SHALL BE HANDLED IN ACCORDANCE WITH THE STANDARD AND SPECIFICATION FOR SUBSURFACE DRAIN OR OTHER APPROVED METHOD.
27. ALL GRADED AREAS SHALL BE PERMANENTLY STABILIZED IMMEDIATELY UPON REACHING FINISHED GRADE. CUT SLOPES IN COMPETENT BEDROCK AND ROCK FILLS NEED NOT BE VEGETATED. SEEDED AREAS WITHIN 50 FEET OF A SURFACE WATER, OR AS OTHERWISE SHOWN ON THE PLAN DRAWINGS, SHALL BE BLANKETED ACCORDING TO THE STANDARDS OF THIS PLAN.
28. IMMEDIATELY AFTER EARTH DISTURBANCE ACTIVITIES CEASE IN ANY AREA OR SUBAREA OF THE PROJECT, THE OPERATOR SHALL STABILIZE ALL DISTURBED AREAS. DURING NON-GERMINATING MONTHS, MULCH OR PROTECTIVE BLANKETING SHALL BE APPLIED AS DESCRIBED IN THE PLAN. AREAS NOT AT FINISHED GRADE, WHICH WILL BE REACTIVATED WITHIN ONE YEAR, MAY BE STABILIZED IN ACCORDANCE WITH THE TEMPORARY STABILIZATION SPECIFICATIONS. THOSE AREAS WHICH WILL NOT BE REACTIVATED WITHIN ONE YEAR SHALL BE STABILIZED IN ACCORDANCE WITH THE PERMANENT STABILIZATION SPECIFICATIONS.
29. PERMANENT STABILIZATION IS DEFINED AS A MINIMUM UNIFORM, PERENNIAL 70% VEGETATIVE COVER OR OTHER PERMANENT NON-VEGETATIVE COVER WITH A DENSITY SUFFICIENT TO RESIST ACCELERATED EROSION. CUT AND FILL SLOPES SHALL BE CAPABLE OF RESISTING FAILURE DUE TO SLUMPING, SLIDING, OR OTHER MOVEMENTS.
30. E&S BMPS SHALL REMAIN FUNCTIONAL AS SUCH UNTIL ALL AREAS TRIBUTARY TO THEM ARE PERMANENTLY STABILIZED OR UNTIL THEY ARE REPLACED BY ANOTHER BMP APPROVED BY PWD AND PA DEP.
31. AFTER FINAL SITE STABILIZATION HAS BEEN ACHIEVED, TEMPORARY E&S BMPS MUST BE REMOVED OR CONVERTED TO PERMANENT POST-CONSTRUCTION STORMWATER MANAGEMENT PRACTICES. AREAS DISTURBED DURING REMOVAL OR CONVERSION OF THE E&S BMPS SHALL BE STABILIZED IMMEDIATELY. IN ORDER TO ENSURE RAPID REVEGETATION OF DISTURBED AREAS, SUCH REMOVAL/CONVERSIONS ARE TO BE DONE ONLY DURING THE GERMINATING SEASON.
32. SEDIMENT BASINS AND/OR TRAPS SHALL BE KEPT FREE OF ALL CONSTRUCTION WASTE, WASH WATER, AND OTHER DEBRIS HAVING POTENTIAL TO CLOG THE BASIN/TRAP OUTLET STRUCTURES AND/OR POLLUTE THE SURFACE WATERS. (WHEN APPLICABLE)
33. DURING CONSTRUCTION, THE SELECTED CONTRACTOR IS EXPECTED TO FOLLOW THE PCSMP APPROVED BY PWD. NO CHANGE OR DEVIATION FROM THE APPROVED PCSMP IS PERMITTED WITHOUT PRIOR APPROVAL FROM PWD.
34. ALL WORK ASSOCIATED WITH PWD WATER CONVEYANCE AND SEWER INFRASTRUCTURE SHALL BE DONE IN ACCORDANCE WITH THE CITY OF PHILADELPHIA WATER DEPARTMENT "WATER MAIN STANDARD DETAILS AND CORROSION CONTROL SPECIFICATIONS," 1985 EDITION, AND "STANDARD DETAILS AND STANDARD SPECIFICATIONS FOR SEWERS," 1985 EDITION.
35. CONTACT PWD WASTER TRANSPORT RECORDS (1101 MARKET STREET, 2ND FLOOR, PHONE: 215-685-6271) FOR ADDITIONAL APPROVALS AND PERMITS REQUIRED FOR ALL WATER SERVICES, METERS, AND CONNECTIONS TO THE EXISTING AND/OR PROPOSED PWD FACILITIES.
36. ALL BUILDING MATERIALS AND WASTES SHALL BE REMOVED FROM THE SITE AND RECYCLED OR DISPOSED OF IN ACCORDANCE WITH THE PA DEP SOLID WASTE MANAGEMENT REGULATIONS AT 25 PA CODE 260.1 ET SEQ., 271.1, AND 287.1 ET SEQ. NO BUILDING MATERIALS OR WASTES OR UNUSED BUILDING MATERIALS SHALL BE BE BURNED, BURIED, DUMPED, OR DISCHARGED AT THE SITE.
37. A DUST CONTROL PERMIT WILL BE REQUIRED WHEN COMPLETELY DEMOLISHING A BUILDING OR STRUCTURE THAT IS MORE THAN THREE STORIES, GREATER THAN FORTY FEET TALL, OR ENCOMPASSES MORE THAN TEN THOUSAND SQUARE FEET; COMPLETELY OR PARTIALLY DEMOLISHING ANY BUILDING OR STRUCTURE BY IMPLOSION; OR ENGAGING IN EARTHWORKS DEFINED AS "CLEARING, GRUBBING, OR EARTH DISTURBANCE OF ANY LAND IN EXCESS OF 5,000 SQUARE FEET."

TEMPORARY STABILIZATION NOTES

1. TEMPORARY STABILIZATION MUST BE PROVIDED FOR EARTH-EXPOSED AREAS WHERE EARTHWORK IS DELAYED OR STOPPED FOR A PERIOD OF 4 OR MORE DAYS, AND PERMANENT STABILIZATION MUST ULTIMATELY BE PROVIDED FOR ALL DISTURBED AREAS.
2. WEED-FREE HAY OR STRAW MULCH MUST BE APPLIED AT 3.0 TONS PER ACRE OR PER SEEDING (TURF AND GRASSES) SPECIFICATION. STRAW MULCH SHALL BE APPLIED IN LONG STRANDS, NOT CHOPPED OR FINELY BROKEN.
3. TEMPORARY SEEDING SHALL CONSIST OF SOD, A BLEND OF TURF-TYPE TALL FESCUE AND KENTUCKY BLUE GRASS (100 PERCENT BY WEIGHT) OR EQUIVALENT AND SHALL BE PLACED AT 30 LBS. PER ACRE OR 10 LBS. PER 1000 S.F.. TEMPORARY SEEDING SHALL BE APPLIED TO THOSE AREAS THAT ARE A POTENTIAL EROSION RISK AND THOSE AREAS WHERE CONSTRUCTION ACTIVITIES HAVE ENDED.

RECYCLING PROGRAM

1. THE CONTRACTOR SHALL REMOVE FROM THE SITE, RECYCLE, OR DISPOSE OF ALL BUILDING MATERIALS AND WASTES IN ACCORDANCE WITH THE DEPARTMENT'S SOLID WASTE MANAGEMENT REGULATIONS 25 PA CODE 260.1 ET SEQ., 271.1 ET SEQ., AND 287.1 ET SEQ. THE CONTRACTOR SHALL NOT ILLEGALLY BURY, DUMP OR DISCHARGE ANY BUILDING MATERIAL OR WASTES. CONSTRUCTION WASTES INCLUDE, BUT ARE NOT LIMITED TO, EXCESS SOIL MATERIALS, BUILDING MATERIAL, CONCRETE WASH WATER, SANITARY WASTES, ETC., WHICH COULD ADVERSELY IMPACT WATER QUALITY.

E&S CONTROL SEQUENCE OF BMP INSTALLATION

1. PRIOR TO EARTH DISTURBANCE ACTIVITIES, EROSION AND SEDIMENTATION CONTROL BMPS SHALL BE INSTALLED ACCORDING TO THIS SEQUENCE.
2. INSTALL TEMPORARY ROCK CONSTRUCTION ENTRANCE AS SHOWN PRIOR TO CLEARING OF THE SITE.
3. INSTALL COMPOST SOCK INLET PROTECTION AND COMPOST SOCK AS SHOWN ON THE PLAN. NO DISTURBANCE CAN TAKE PLACE OUTSIDE OF THE LIMIT OF DISTURBANCE.
4. AFTER FINISHED GRADING, INSTALL EROSION CONTROL BLANKET AS SHOWN ON THE PLAN.
5. AFTER FINAL SITE STABILIZATION HAS BEEN ACHIEVED (VEGETATIVE AREAS SHALL BE CONSIDERED PERMANENTLY STABILIZED WHEN A UNIFORM 70% VEGETATIVE COVER OF EROSION RESISTANT PERENNIAL SPECIES HAS BEEN ACHIEVED), REMOVE TEMPORARY EROSION AND SEDIMENTATION CONTROLS. AREAS DISTURBED DURING REMOVAL OF THE CONTROLS MUST ALSO BE STABILIZED IMMEDIATELY.
6. UPON SITE STABILIZATION, COMPOST SOCKS MAY BE REMOVED. PLACE COMPOST AS DIRECTED BY THE OWNER AND DISPOSE OF THE GEOTEXTILE SOCK.
7. THE CONTRACTOR SHALL TAKE APPROPRIATE MEASURES TO CONTROL DUST GENERATED FROM CONSTRUCTION ACTIVITIES. THIS MAY INCLUDE SPRINKLING/IRRIGATION, VEGETATIVE COVER, MULCHING, AND/OR INSTALLATION WIND BREAKS. SEE THE PA DEP EROSION AND SEDIMENT POLLUTION CONTROL PROGRAM MANUAL, APPENDIX H.

NPDES NOTES

1. RECEIVING WATERS: WISSAHICKON CREEK
2. WISSAHICKON WATERSHED OVERLAY: CATEGORY 3
3. ALL SOILS WITHIN THE PROJECT AREA ARE:
   - 3.1. UdB: URBAN LAND-CHESTER COMPLEX, 0 TO 8 PERCENT SLOPES
   - 3.2. UdC: URBAN LAND-CHESTER COMPLEX, 8 TO 16 PERCENT SLOPES
4. THE EROSION AND SEDIMENT CONTROL PLAN MINIMIZES EXTENTS AND DURATION OF EARTH DISTURBANCE.
5. THE EROSION AND SEDIMENT CONTROL PLAN MAXIMIZES PROTECTION OF EXISTING DRAINAGE FEATURES AND VEGETATION.
6. THE EROSION AND SEDIMENT CONTROL PLAN MINIMIZES SOIL COMPACTION.
7. THE EROSION AND SEDIMENT CONTROL PLAN UTILIZES OTHER MEASURES OF CONTROLS THAT PREVENT OR MINIMIZE GENERATION OF INCREASED STORMWATER RUNOFF.
8. THIS PROJECT WILL PRESERVE THE INTEGRITY OF STREAM CHANNELS, AND MAINTAIN AND PROTECT THE PHYSICAL, BIOLOGICAL AND CHEMICAL QUALITIES OF THE SCHUYLKILL RIVER.

THE CONSTRUCTION PLANS HAVE BEEN DEVELOPED BASED ON AVAILABLE INFORMATION PROVIDED BY THE OWNER. THE PROJECT AREA INCLUDES EXISTING UTILITIES OF UNKNOWN LOCATION AND DEPTH. ACTUAL CONDITIONS MAY DIFFER FROM THE PLANS. THE CONTRACTOR IS RESPONSIBLE FOR VERIFYING ALL CONDITIONS PRIOR TO INITIATING WORK, AND FOR NOTIFYING OWNER IMMEDIATELY UPON BECOMING AWARE OF POTENTIAL CONFLICTS OR VARIATIONS IN CONDITIONS. THE CONTRACTOR IS RESPONSIBLE FOR FIELD VERIFICATION OF ALL UTILITY AND STRUCTURE LOCATIONS AND ELEVATIONS AS REQUIRED FOR CONSTRUCTION.

ALL LOCATIONS OF EXISTING UTILITIES SHOWN ON THIS PLAN HAVE BEEN DEVELOPED FROM EXISTING UTILITY RECORDS AND/OR ABOVE GROUND EXAMINATION OF THE SITE. COMPLETENESS OR ACCURACY OF LOCATION AND DEPTH OF UNDERGROUND UTILITIES OR STRUCTURES CANNOT BE GUARANTEED. CONTRACTOR MUST VERIFY LOCATION AND DEPTH OF ALL UNDERGROUND UTILITIES AND FACILITIES BEFORE START OF WORK PER PENNSYLVANIA ACT 287 OF 1974 AS AMENDED BY ACT 199 OF 2004 OR LATER.

OPERATION AND MAINTENANCE

1. THE CONTRACTOR IS RESPONSIBLE FOR THE OPERATION & MAINTENANCE OF ALL E&S AND STORMWATER MANAGEMENT FACILITIES DURING CONSTRUCTION. UPON FINAL APPROVAL AND ACCEPTANCE OF THE PROJECT BY OWNER WILL ASSUME RESPONSIBILITY FOR ALL LONG-TERM MAINTENANCE.
2. A WRITTEN MAINTENANCE REPORT MUST BE KEPT AT THE SITE DURING CONSTRUCTION. IT IS THE RESPONSIBILITY OF THE SITE CONTRACTOR TO ENSURE THAT THIS OPERATION & MAINTENANCE SCHEDULE BE MAINTAINED AND LOGGED.

CRITICAL STAGES INSPECTION NOTES:

THE FOLLOWING ARE CRITICAL STAGES OF IMPLEMENTATION OF THE PCSM PLAN FOR WHICH THE ENGINEER SHOULD BE PRESENT ON SITE:

a. DETENTION SYSTEM INSTALLATION

b. BIORETENTION SYSTEM INSTALLATION

PWD STANDARD SEQUENCE OF CONSTRUCTION NOTES

1. AT LEAST SEVEN (7) DAYS PRIOR TO ANY EARTH DISTURBANCE, THE INSPECTIONS COORDINATOR OF PWD (OFFICE: 215-685-6387) MUST BE CALLED TO SCHEDULE A PRE-CONSTRUCTION MEETING.
2. AT LEAST THREE (3) DAYS PRIOR TO SMP INSTALLATION, THE INSPECTIONS COORDINATOR OF PWD (OFFICE: 215-685-6387) MUST BE CALLED TO SCHEDULE AN INSPECTION FOR EACH SMP.

   LIST OF PROPOSED SMPS:

   a. RG1: RAIN GARDEN

   b. BED-1: SUBSURFACE STONE BED

3. ALL STONE THAT MAKES UP INFILTRATING SMPS MUST REMAIN FREE OF SEDIMENT. IF SEDIMENT ENTERS THE STONE, THE CONTRACTOR MAY BE REQUIRED TO REMOVE THE SEDIMENT AND REPLACE IT WITH CLEAN-WASHED STONE.
4. UPON COMPLETION OF ALL EARTH DISTURBANCE ACTIVITIES AND PERMANENT STABILIZATION OF ALL DISTURBANCE AREAS, THE OWNER AND/OR OPERATOR SHALL CONTACT THE INSPECTIONS COORDINATOR OF PWD (OFFICE: 215-685-6387) FOR A FINAL INSPECTION PRIOR TO REMOVAL/CONVERSION OF THE E&S BMPS.
5. AS SOON AS SLOPES, CHANNELS, DITCHES, AND OTHER DISTURBED AREAS REACH FINAL GRADE, THEY MUST BE STABILIZED. CESSATION OF ACTIVITY FOR FOUR (4) DAYS OR LONGER REQUIRES TEMPORARY STABILIZATION.
6. THE NPDES NOTICE OF TERMINATION (N.O.T.) MUST BE SUBMITTED TO PA DEP UPON COMPLETION OF CONSTRUCTION FOR PROJECTS OVER 1 ACRE.
7. WATER PUMPED FROM WORK AREAS SHOULD BE TREATED FOR SEDIMENT REMOVAL PRIOR TO DISCHARGING TO A "SURFACE WATER" WHERE APPLICABLE.

MATTHEW BAIRD ARCHITECTS
277 Broadway, 10th Floor
New York, NY 10007
T: 212.334.2499
F: 212.285.1049

LANDSCAPE ARCHITECT:
ANDROPOGON
2209 Chestnut Street
Philadelphia, PA 19103
T: 215 487 0700

LOCAL ARCHITECT:
KRIEGER AND ASSOCIATES
14 W Highland Avenue
Philadelphia, PA 19118
T: 215 247 2020

CIVIL ENGINEER:
MELIORA
259 Morgan Street
Phoenixville, PA 19460
T: 610 933 0123

ZONING CODE:
BALLARD SPAHR
1735 Market Street, 51st Floor
Philadelphia, PA 19103
T: 215 665 8500

REVISION

NO:	DATE:	REMARK:

ISSUED FOR:
ZONING PERMIT

EROSION AND SEDIMENT CONTORL NOTES - SHEET 1

PROJECT:
0224
WOODMERE ART MUSEUM
ST. MICHAEL'S HALL

9001 Germantown Ave.
Philadelphia, PA 19118

Date: APRIL 22, 2022
Scale: 1" = 30'
Dwg By: MD/AM
Proj No: 0224-SMH

SEAL + SIGNATURE:

COMMONWEALTH OF PENNSYLVANIA
REGISTERED PROFESSIONAL
ALTUE M MACY
ENGINEER
No. PE089399

THIS DRAWING IS ONLY VALID FOR CONSTRUCTION, BIDDING OR GOVERNMENT AGENCY REVIEW IF SAID DRAWING BEARS AN ORIGINAL STAMPING OF THE SEAL OF THE ARCHITECT WHOSE SIGNATURE APPEARS HEREON. THIS DRAWING IS THE PRODUCT OF SERVICE AND IS THE PROPERTY OF MATTHEW BAIRD ARCHITECT PLLC. IT IS TO BE USED ONLY FOR THE PROJECT NOTED HEREIN. REUSE OF THIS DRAWING FOR ANY OTHER PROJECT OR ALTERATION OR EXTENSION OF THIS PROJECT IS PROHIBITED WITHOUT THE WRITTEN PERMISSION OF MATTHEW BAIRD ARCHITECT PLLC. ANY UNAUTHORIZED REUSE IS A VIOLATION OF US COPYRIGHT LAW. UNAUTHORIZED ALTERATIONS OR ADDITIONS TO THIS DRAWING IS A VIOLATION OF SECTION 2059 (2) OF THE NEW YORK STATE EDUCATION LAW.

CONSTRUCTION SEQUENCE

THE CONTRACTOR SHALL MARK THE LOCATIONS OF ANY FUTURE INFILTRATION AREAS. THESE AREAS SHALL BE PROTECTED FROM COMPACTION AND HEAVY VEHICLE DISTURBANCE THROUGHOUT CONSTRUCTION. EXCAVATION WILL BE REQUIRED TO REMOVE SURFACE HARDPAN AND ACHIEVE FINAL GRADE FOR INFILTRATION AREAS. ONCE HARDPAN IS REMOVED, STAKE THE PERIMETER OF THE PROPOSED INFILTRATION AREAS TO PROTECT THESE AREAS FROM COMPACTION AND SILTATION.

UPON COMPLETION OR TEMPORARY CESSATION OF EARTH DISTURBANCE ACTIVITIES OR ANY STAGE THEREOF, THE PROJECT SHALL BE IMMEDIATELY STABILIZED WITH THE APPROPRIATE TEMPORARY OR PERMANENT STABILIZATION AS OUTLINED BELOW.

1. ORDER A UTILITY MARK OUT UTILIZING THE PENNSYLVANIA ONE CALL SYSTEM. SITE UTILITIES MUST BE FIELD LOCATED AND MARKED BEFORE THE START OF ANY SITE WORK, INCLUDING ALL PRIVATE UTILITIES.
2. ALL EARTH DISTURBANCE ACTIVITIES SHALL PROCEED IN ACCORDANCE WITH THE FOLLOWING SEQUENCE. EACH STAGE SHALL BE COMPLETED BEFORE ANY FOLLOWING STAGE IS INITIATED. CLEARING AND GRUBBING SHALL BE LIMITED ONLY TO THOSE AREAS DESCRIBED IN EACH STAGE.
3. TO AVOID SOIL DISTURBANCE AND COMPACTION DURING CONSTRUCTION, AREAS FOR PROPOSED INFILTRATION STORMWATER MANAGEMENT PRACTICES MUST BE PHYSICALLY STAKED OUT BEFORE ANY SITE WORK BEGINS.
4. INSTALL TEMPORARY ROCK CONSTRUCTION ENTRANCE AS SHOWN PRIOR TO CLEARING THE SITE.
5. INSTALL COMPOST SOCK, AND INLET PROTECTION AS SHOWN ON THE PLAN. NO DISTURBANCE CAN TAKE PLACE OUTSIDE OF THE LIMIT OF DISTURBANCE.
6. MARK INFILTRATION AREAS PRIOR TO ANY LAND-DISTURBING ACTIVITIES. INFILTRATION AREAS ARE NOT TO BE COMPACTED.
7. PERFORM SITE DEMOLITION EXCEPT FOR DRAINAGE STRUCTURES NECESSARY FOR EROSION AND SEDIMENT CONTROL PURPOSES AND FOR SITE DRAINAGE UNTIL NEW DRAINAGE SYSTEM IS FUNCTIONING.
8. CLEAR AND GRUB SITE. THE CLEARING OF VEGETATION FROM THE CONSTRUCTION AREA IS LIMITED TO THE AREA SHOWN ON THE DRAWINGS.
9. DEMOLISH AND REMOVE ASPHALT, CONCRETE AND STRUCTURES INDICATED FOR DEMOLITION. THE CONTRACTOR SHOULD WORK FROM THE OUTERMOST PORTIONS OF THE SITE AND IN TOWARDS THE CONSTRUCTION ENTRANCE. THE ROCK CONSTRUCTION ENTRANCE SHOULD REMAIN UNTIL ALL OTHER DISTURBANCE IS COMPLETE.
10. DEMOLISH AND REMOVE EXISTING BUILDING ON SITE PER OWNER DIRECTION.
11. FOLLOWING ITEMS ARE TO BE INSTALLED AS APPROPRIATE TO LOCATION AND ELEVATIONS:
    a. PERFORM MAJOR EXCAVATIONS AND ROUGH GRADE THE SITE AS INDICATED ON GRADING AND STORMWATER PLAN, REMOVING ANY DELETERIOUS MATERIAL 2-INCHES OR LARGER. REMOVE EXCESS CUT FROM SITE AND DISPOSE OF IN A LEGAL MANNER IN ACCORDANCE WITH THE SOLID WASTE MANAGEMENT REGULATIONS (SEE RECYCLING PROGRAM NOTE).
    b. IF ANY UNFAVORABLE CONDITIONS ARE ENCOUNTERED DURING THE INSTALLATION OF POROUS UNIT PAVERS (I.E. GROUNDWATER AND/OR BEDROCK, ETC.), THE OWNER/ENGINEER SHOULD BE NOTIFIED IMMEDIATELY.
    c. INSTALL INLETS AND OVERFLOW CONTROL STRUCTURES INCLUDING RELATED E&S INLET PROTECTION. INSTALL PIPES. DO NOT ALLOW SEDIMENT TO ENTER ANY PIPES OR STRUCTURES. SEE SMP CONSTRUCTION CERTIFICATION PACKAGE FOR MORE INFORMATION, SPECIFICALLY WHEN PWD MUST BE ON SITE AND WHAT MUST BE DOCUMENTED. INSTALL ANY REMAINING STORMWATER STRUCTURES, INCLUDING UNDERDRAINS NOT CONNECTED TO STORMWATER MANAGEMENT SYSTEMS. CONNECT OVERFLOW STRUCTURES. INSTALL INLET PROTECTION AND DO NOT ALLOW SEDIMENT INTO PIPES AND STRUCTURES.
    d. CONSTRUCT WALLS, SITE STRUCTURES, AND OTHER IMPROVEMENTS.
12. *INSTALL BIORETENTION SYSTEMS AS SHOWN ON CIVIL AND LANDSCAPE PLANS AND DETAILS, AS DOCUMENTED ON THE CONSTRUCTION/PERMIT DRAWINGS. THE RESULTS OF INFILTRATION TESTING HAS DETERMINED WHICH BIORETENTION SYSTEM ARE DESIGNED AS INFILTRATING. FOLLOW THE APPROPRIATE STEP IN RESPONSE TO THE RESULT AS SHOWN ON THE STORMWATER PLANS AND DETAILS.
    a. PROVIDE EROSION AND SEDIMENTATION CONTROL PROTECTION ON THE SITE SUCH THAT CONSTRUCTION RUNOFF IS DIRECTED AWAY FROM THE PROPOSED BIOINFILTRATION/BIORETENTION LOCATION. THE DESIGNER IS REFERRED TO THE LATEST EDITION OF THE PA DEP EROSION AND SEDIMENT POLLUTION CONTROL PROGRAM MANUAL FOR INFORMATION ON DESIGN STANDARDS FOR EROSION AND SEDIMENTATION CONTROL PRACTICES.
    b. BIOINFILTRATION AREAS MUST BE PHYSICALLY MARKED PRIOR TO ANY LAND-DISTURBING ACTIVITIES TO AVOID SOIL DISTURBANCE AND COMPACTION DURING CONSTRUCTION. INSTALL CONSTRUCTION FENCING AROUND BIOINFILTRATION AREAS.
    c. CONTACT PWD'S INSPECTIONS STAFF AT LEAST THREE (3) DAYS PRIOR TO THE START OF CONSTRUCTION OF ANY SMP, INCLUDING EXCAVATION OF SMPS AND SOIL TESTING IF APPLICABLE. SMP INSTALLATION MUST BE OBSERVED BY PWD INSPECTIONS STAFF. SEE SMP CONSTRUCTION CERTIFICATION PACKAGE FOR MORE INFORMATION, SPECIFICALLY WHEN PWD MUST BE ON SITE AND WHAT MUST BE DOCUMENTED.
    d. PROPOSED BIORETENTION AREAS MAY BE USED AS SEDIMENT TRAPS DURING CONSTRUCTION. BIOINFILTRATION AREAS MAY NOT BE USED AS SEDIMENT TRAPS DURING CONSTRUCTION, UNLESS AT LEAST THREE FEET OF SOIL ARE LEFT IN PLACE WHILE THE AREA IS SERVING AS A SEDIMENT TRAP AND SUBSEQUENTLY REMOVED DURING CONSTRUCTION AFTER THE CONTRIBUTING DRAINAGE AREAS HAVE BEEN STABILIZED.
    e. COMPLETE SITE ELEVATION GRADING AND STABILIZE THE SOIL DISTURBED WITHIN THE LIMITS OF DISTURBANCE. DO NOT FINALIZE BIOINFILTRATION/BIORETENTION EXCAVATION AND CONSTRUCTION UNTIL THE DRAINAGE AREA IS FULLY STABILIZED.
    f. EXCAVATE BIOINFILTRATION/BIORETENTION AREA TO PROPOSED INVERT DEPTH AND MANUALLY SCARIFY THE IN SITU SOILS AT THE BASE OF THE EXCAVATION. DO NOT COMPACT IN SITU SOILS. HEAVY EQUIPMENT MUST NOT BE USED WITHIN THE BIOINFILTRATION AREA. ALL EQUIPMENT MUST BE KEPT OUT OF THE EXCAVATED AREA TO THE MAXIMUM EXTENT POSSIBLE. THE USE OF MACHINERY TO LOAD ANY PROPOSED STONE FROM OUTSIDE OF THE BASIN FOOTPRINT IS RECOMMENDED. ROCK CONSTRUCTION ENTRANCES MUST NOT BE LOCATED ON TOP OF AREAS PROPOSED FOR INFILTRATION PRACTICES. HEAVY EQUIPMENT EXCLUSION ZONES MUST BE ESTABLISHED TO AVOID COMPACTION OF THE INFILTRATION AREA DURING CONSTRUCTION.
    g. IF RAIN GARDEN 1 IS TO BE DESIGNED AS INFILTRATING, ENSURE UNDERDRAINS ARE EQUIPPED WITH A WATER-TIGHT END CAP WITHIN THE OUTLET CONTROL STRUCTURE.
    h. IF RAIN GARDEN 1 IS TO BE DESIGNED AS NONINFILTRAING, INSTALL A MICRO SIPHONE SMART DRAIN BELT AS SHOWN ON THE DETAILS WITHIN A LAYER OF SAND. ANY SAND WITHIN THE INFILTRATION SMP MUST REMAIN FREE OF SEDIMENT. IF SEDIMENT ENTERS THE SAND, THE CONTRACTOR MAY BE REQUIRED TO REMOVE THE SEDIMENT AND REPLACE WITH CLEAN WASHED SAND. PLACE FILTER FABRIC, THEN PLACE THE SAND, AND SET THE SMART DRAIN ACCORDING TO THE PLANS.
    i. ANY STONE WITHIN RG-1 MUST REMAIN FREE OF SEDIMENT AND MEET THE WASHED STONE SPECIFICATION FOUND ABOVE. IF SEDIMENT ENTERS THE STONE, THE CONTRACTOR MAY BE REQUIRED TO REMOVE THE SEDIMENT AND REPLACE WITH CLEAN WASHED STONE.
    j. FOR RG-1, PLACE FILTER FABRIC OR PEA GRAVEL FILTER, THEN PLACE THE STONE, AND SET THE UNDERDRAIN ACCORDING TO THE PLANS.
    k. BACKFILL THE EXCAVATED AREA AS SOON AS THE SUBGRADE PREPARATION IS COMPLETE TO AVOID ACCUMULATION OF DEBRIS. PLACE BIOINFILTRATION/BIORETENTION SOIL IN 12- TO 18-INCH LIFTS, AND TAMP LIGHTLY BY HAND OR COMPACT BY WATERING EACH LIFT. ENSURE BACKFILL PROCESS DOES NOT DISRUPT PIPE PLACEMENT AND CONFIGURATION. SLIGHT OVERFILLING MIGHT BE NECESSARY TO ACCOUNT FOR SETTLEMENT. PRESOAK THE SOIL AT LEAST ONE DAY PRIOR TO FINAL GRADING AND LANDSCAPING TO ALLOW FOR SETTLEMENT.
    l. AFTER ALLOWING FOR SETTLEMENT, COMPLETE FINAL GRADING WITHIN ABOUT TWO INCHES OF THE PROPOSED DESIGN ELEVATIONS, LEAVING SPACE FOR TOP DRESSING OF MULCH OR MULCH/COMPOST BLEND.
    m. SEED AND PLANT VEGETATION AS INDICATED ON THE PLANS AND SPECIFICATIONS.
    n. PLACE MULCH AND HAND GRADE TO FINAL ELEVATIONS.
    o. INSTALL ENERGY DISSIPATERS AS SPECIFIED ON THE PLANS, IF APPLICABLE.
    p. WATER VEGETATION AT THE END OF EACH DAY FOR TWO WEEKS AFTER PLANTING IS COMPLETED.
    q. WATER VEGETATION REGULARLY DURING FIRST YEAR TO ENSURE SUCCESSFUL ESTABLISHMENT.
13. INSTALL WALKS TO LINE AND GRADE AS SHOWN ON PLANS AND DETAILS.
14. EXCAVATE AND FINE GRADE SUBGRADE AS NECESSARY FOR WALKWAY AND PAVEMENT INSTALLATION.
15. *INSTALL DETENTION/INFILTRATION SYSTEMS AS SHOWN ON CIVIL PLANS AND DETAILS.
    a. PROVIDE EROSION AND SEDIMENTATION CONTROL PROTECTION ON THE SITE SUCH THAT CONSTRUCTION RUNOFF IS DIRECTED AWAY FROM THE PROPOSED SUBSURFACE DETENTION SMP. SEDIMENT DEPOSITED IN A SUBSURFACE DETENTION/INFILTRATION SMP DURING CONSTRUCTION, PARTICULARLY A STONE BED SYSTEM, CAN REDUCE SYSTEM PERFORMANCE. THE DESIGNER IS REFERRED TO THE LATEST EDITION OF THE PENNSYLVANIA DEPARTMENT OF ENVIRONMENTAL PROTECTION (PA DEP) EROSION AND SEDIMENT POLLUTION CONTROL PROGRAM MANUAL FOR INFORMATION ON DESIGN STANDARDS FOR EROSION AND SEDIMENTATION CONTROL PRACTICES.
    a. CONTACT PWD'S INSPECTIONS STAFF AT LEAST THREE (3) DAYS PRIOR TO THE START OF CONSTRUCTION OF ANY SMP, INCLUDING EXCAVATION OF SMPs AND SOIL TESTING IF APPLICABLE. SMP INSTALLATION MUST BE OBSERVED BY PWD INSPECTIONS STAFF. SEE SMP CONSTRUCTION CERTIFICATION PACKAGE FOR MORE INFORMATION, SPECIFICALLY WHEN PWD MUST BE ON SITE AND WHAT MUST BE DOCUMENTED.
    b. IF DETENTION BED IS DESIGN TO INFILTRATE, EXISTING SUBGRADE MUST NOT BE COMPACTED OR SUBJECT TO EXCESSIVE CONSTRUCTION EQUIPMENT PRIOR TO PLACEMENT OF GEOTEXTILE AND STONE BED. THE USE OF MACHINERY TO LOAD STONE FROM OUTSIDE OF THE INFILTRATION BED FOOTPRINT IS RECOMMENDED. STONE SHOULD BE CAREFULLY PLACED, NOT DUMPED, IN THE INFILTRATION BED. IF IT IS ESSENTIAL THAT EQUIPMENT BE USED IN THE EXCAVATED AREA, ALL EQUIPMENT MUST BE LOW GROUND PRESSURE EQUIPMENT AND APPROVED BY PWD. USE OF EQUIPMENT WITH NARROW TRACKS OR TIRES, RUBBER TIRES WITH LARGE LUGS, OR HIGH PRESSURE TIRES WILL CAUSE EXCESSIVE COMPACTION AND MUST NOT BE USED. SHOULD THE SUBGRADE BE COMPACTED DURING CONSTRUCTION, ADDITIONAL TESTING OF SOIL INFILTRATION RATES AND SMP REDESIGN MAY BE REQUIRED. ROCK CONSTRUCTION ENTRANCES MUST NOT BE LOCATED ON TOP OF AREAS PROPOSED FOR INFILTRATION PRACTICES.
    c. EXCAVATE SUBSURFACE DETENTION AREA TO PROPOSED DEPTH, PROVIDING APPROPRIATE SHORING AND SHEETING FOR DEEP EXCAVATIONS.
    d. PLACE GEOTEXTILE, ENSURING ADEQUATE OVERLAP OF 16 INCHES, OR PEA GRAVEL, AND STORAGE STONE.
    e. ALL STONE THAT MAKES UP THE INFILTRATION BED MUST REMAIN FREE OF SEDIMENT. IF SEDIMENT ENTERS THE STONE, THE CONTRACTOR MAY BE REQUIRED TO REMOVE THE SEDIMENT AND REPLACE WITH CLEAN WASHED STONE.
    f. IF THE DETNETION BED IS DESIGNED AS NONINFILTRATING, INSTALL A MICRO SIPHONE SMART DRAIN UNDERDRAIN PER THE DETAILS IN A LAYER OF SAND.
    g. SET THE PIPE OR CHAMBER STORAGE, IF PROPOSED, DURING INSTALLATION OF THE STONE STORAGE BED, ACCORDING TO THE PLANS.
    h. PLACE GEOTEXTILE IN ACCORDANCE WITH MANUFACTURER'S STANDARDS AND RECOMMENDATIONS.
    i. SECURE GEOTEXTILE AT LEAST FOUR FEET OUTSIDE BED.
    j. PLACE STONE IN SIX- TO EIGHT-INCH LIFTS AND LIGHTLY COMPACT.
    k. CONFIRM STORAGE AREA DIMENSIONS AND OUTLET CONTROL ELEVATIONS PRIOR TO BACKFILL.
    l. CONFIRM AND DOCUMENT INVERT ELEVATIONS AND DIMENSIONS FOR ALL STRUCTURES SUCH AS VAULTS AND PIPES PRIOR TO BACKFILL.
    m. BACKFILL TO FINISHED GRADE. ENSURE BACKFILL IS PROPERLY COMPACTED IN ACCORDANCE WITH SPECIFICATIONS. ENSURE BACKFILL PROCESS DOES NOT DISRUPT PIPE PLACEMENT AND CONFIGURATION.
    n. STRUCTURES SUCH AS INLET BOXES, REINFORCED CONCRETE BOXES, INLET CONTROLS, AND OUTLET CONTROLS MUST BE CONSTRUCTED ACCORDING TO MANUFACTURER'S GUIDELINES OR DESIGN PROFESSIONAL'S GUIDANCE.
    o. ONCE THE SITE IS PERMANENTLY STABILIZED WITH VEGETATION, REMOVE TEMPORARY EROSION AND SEDIMENT CONTROL MEASURES.
16. INSTALL REMAINING SITE STRUCTURES.
17. PERFORM FINE SITE GRADING AND SEED AND STABILIZE SITE AS SHOWN ON LANDSCAPE PLANS.
18. INFLOW AND OUTFLOW POINTS SHOULD BE KEPT CLEAR OF ALL TYPES OF DEBRIS.
19. WATER PUMPED FROM WORK AREAS SHOULD BE TREATED FOR SEDIMENT REMOVAL PRIOR TO DISCHARGING TO A SURFACE WATER.
20. AFTER FINAL SITE STABILIZATION HAS BEEN ACHIEVED (VEGETATED AREAS SHALL BE CONSIDERED PERMANENTLY STABILIZED WHEN A UNIFORM 70% VEGETATIVE COVER OF EROSION RESISTANT PERENNIAL SPECIES HAS BEEN ACHIEVED), REMOVE TEMPORARY EROSION AND SEDIMENTATION CONTROLS. AREAS DISTURBED DURING REMOVAL OF THE CONTROLS MUST ALSO BE STABILIZED IMMEDIATELY. THE CONTRACTOR SHALL CONTACT PWD FOR AN INSPECTION PRIOR TO REMOVAL/CONVERSION OF THE E&S BMPS.
21. THE PERMITTEE SHALL PROVIDE ENGINEERING CONSTRUCTION OVERSIGHT FOR THE PROPOSED STORMWATER BMPS. ADDITIONAL SOIL TESTING MAY BE REQUIRED PRIOR TO THE INSTALLATION OF BMPS TO ENSURE PROPER LOCATION AND FUNCTION. A LICENSED PROFESSIONAL ENGINEER KNOWLEDGEABLE IN THE DESIGN AND CONSTRUCTION OF STORMWATER BMPS, PREFERABLY THE DESIGN ENGINEER, SHALL CONDUCT THE OVERSIGHT.
22. AS-BUILT PLANS OF THE STORMWATER BMPS SHALL BE PROVIDED BY THE CONTRACTOR WITHIN SIX MONTHS FOLLOWING THE COMPLETION OF EACH PHASE. THE AS-BUILT PLANS SHALL BE SIGNED AND SEALED BY A PA REGISTERED PROFESSIONAL ENGINEER.
23. A NOTICE OF TERMINATION (NOT) WILL BE REQUIRED TO BE SUBMITTED FOLLOWING APPROVAL OF THE FINAL AS-BUILT PLANS. PRIOR TO ACCEPTING THE NOT, THE PHILADELPHIA WATER DEPARTMENT AND DESIGN TEAM WILL PERFORM A FINAL INSPECTION TO ENSURE SITE STABILIZATION AND VERIFY ADEQUATE INSTALLATION AND FUNCTION OF STORMWATER BMPS.

* DENOTES A CRITICAL STAGE IN WHICH A REGISTERED DESIGN PROFESSIONAL MUST DOCUMENT SPECIFIC ELEVATIONS, MEASUREMENTS, AND INSTALLATION.

PERMANENT STABILIZATION NOTES

PERMANENT STABILIZATION SHOULD BE IN ACCORDANCE WITH ALL LANDSCAPE PLANS AND SPECIFICATIONS.

1. VEGETATIVE SPECIES SHALL BE IN ACCORDANCE WITH THE LANDSCAPE PLANTING SCHEDULE, WHICH INCLUDES:
    a. CANOPY TREES: PER LANDSCAPE PLANTING SCHEDULE.
    b. UNDERSTORY TREES: PER LANDSCAPE PLANTING SCHEDULE.
    c. SHRUBS: PER LANDSCAPE PLANTING SCHEDULE.
    d. HERBACEOUS PERENNIALS: PER LANDSCAPE PLANTING SCHEDULE.
2. % PURE LIVE SEED: PER THE LANDSCAPE PLANTING SCHEDULE.
3. SEED APPLICATION RATE: PER THE LANDSCAPE PLANTING SCHEDULE.
4. FERTILIZER TYPE: PENDING RECOMMENDATIONS FROM SOIL-SAMPLING RESULTS PER LANDSCAPE SPECIFICATION.
5. FERTILIZER APPLICATION RATE: PENDING RECOMMENDATIONS FROM SOIL-SAMPLING RESULTS PER LANDSCAPE SPECIFICATION. FOLLOW STATE GUIDELINES ON APPLICATION RATES.
6. MULCH TYPE: ORGANIC MULCH: FREE FROM DELETERIOUS MATERIALS AND SUITABLE AS A TOP DRESSING OF TREES AND SHRUBS, PER LANDSCAPE SPECIFICATION AND DETAILS.
7. MULCHING RATE: APPLY 3-INCH AVERAGE THICKNESS OF ORGANIC MULCH OVER WHOLE SURFACE OF PLANTING AREA, AND FINISH LEVEL WITH ADJACENT FINISH GRADES.
8. LIMING RATE: PENDING RECOMMENDATIONS FROM SOIL-SAMPLING RESULTS PER LANDSCAPE SPECIFICATION. FOLLOW STATE GUIDELINES ON APPLICATION RATES.
9. ANCHOR MATERIAL: EROSION CONTROL FABRIC REQUIRED ON ALL SLOPES 3:1 AND GREATER,. EROSION CONTROL BLANKET TO BE BIONET SC150BN EXTENDED TERM BIODEGRADABLE EROSION CONTROL BLANKET BY NORTH AMERICAN GREEN, DISTRIBUTED BY JOBSITE PRODUCTS, INC. HARLEYSVILLE, PA, OR APPROVED EQUAL.
10. ANCHORING METHOD: WOODEN STAKES
11. RATE OF ANCHOR MATERIAL APPLICATION: OVERLAP BLANKET 6" MINIMUM AND STAPLED; WOODEN STAKES 18" OC.
12. TOPSOIL PLACEMENT DEPTH: 36" PLANTING SOIL, IN ACCORDANCE WITH LANDSCAPE SPECIFICATIONS
13. SEEDING SEASON DATES: FALL PLANTING: OCTOBER 1 TO NOVEMBER 15.

SOIL AMENDMENT	PER ACRE	PER 1,000 SQ. FT.	PER 1,000 SQ. YD.	NOTES	VEGETATIVE SPECIES	% PURE LIVE SEED	SEED APPLICATION RATE	ANCHOR MATERIAL	ANCHORING METHOD	SEEDING SEASON DATES
PERMANENT SEEDING APPLICATION RATE										
AGRICULTURAL LIME	2 TONS	240 LB.	800 LB.	OR AS PER SOIL TEST; MAY NOT BE REQUIRED IN AGRICULTURAL FIELDS	PENNDOT FORMULA B MIX	MINIMUM OF 97% LIVE SEED	213 LBS. PER ACRE OR 5 LBS PER 1000 S.F.	WEED-FREE HAY OR STRAW MULCH MUST BE APPLIED AT 3.0 TONS PER ACRE. STRAW MULCH SHALL BE APPLIED IN LONG STRANDS, NOT CHOPPED OR FINELY BROKEN.		MARCH 15 THRU JUNE 1 OR AUG 1 THRU OCT 15
10-20-20 FERTILIZER	680 LB.	25 LB.	140 LB.	OR AS PER SOIL TEST; MAY NOT BE REQUIRED IN AGRICULTURAL FIELDS						
TEMPORARY SEEDING APPLICATION RATE										
AGRICULTURAL LIME	1 TON	40 LB.	410 LB.	TYPICALLY NOT REQUIRED FOR TOPSOIL STOCKPILES	OATS (AVERE SATIVA) IN SPRING AND/OR SUMMER, AND WINTER WHEAT IN FALL AND/OR WINTER	MINIMUM OF 85% LIVE SEED	30 LBS. PER ACRE OR 10 LBS. PER 1000 S.F.	WEED-FREE HAY OR STRAW MULCH MUST BE APPLIED AT 3.0 TONS PER ACRE. STRAW MULCH SHALL BE APPLIED IN LONG STRANDS, NOT CHOPPED OR FINELY BROKEN.		SPRING SEEDING UP TO JUNE 15; LATE SPRING TO SUMMER SEEDING FROM JUNE 16 TO AUGUST 15; LATE SUMMER AND FALL SEEDINF FROM AUGUST 16 AND LATER
10-10-10 FERTILIZER	680 LB.	12.5 LB.	140 LB.	TYPICALLY NOT REQUIRED FOR TOPSOIL STOCKPILES						

NOTES:
1. ADAPTED FROM PENN STATE, "EROSION CONTROL AND CONSERVATION PLANTINGS ON NONCROPLAND" FOR TEMPORARY SEEDING AND PENNDOT PUBLICATION 408/2020 FOR PERMANENT SEEDING.

MATTHEW BAIRD ARCHITECTS
277 Broadway, 10th Floor
New York, NY 10007
T: 212.334.2499
F: 212.285.1049

LANDSCAPE ARCHITECT:
ANDROPOGON
2209 Chestnut Street
Philadelphia, PA 19103
T: 215 487 0700

LOCAL ARCHITECT:
KRIEGER AND ASSOCIATES
14 W Highland Avenue
Philadelphia, PA 19118
T: 215 247 2020

CIVIL ENGINEER:
MELIORA
259 Morgan Street
Phoenixville, PA 19460
T: 610 933 0123

ZONING CODE:
BALLARD SPAHR
1735 Market Street, 51st Floor
Philadelphia, PA 19103
T: 215 665 8500

REVISION

NO:	DATE:	REMARK:

ISSUED FOR:
ZONING PERMIT

EROSION AND SEDIMENT CONTORL NOTES - SHEET 2

PROJECT:
0224
WOODMERE ART MUSEUM
ST. MICHAEL'S HALL

9001 Germantown Ave.
Philadelphia, PA 19118

Date: APRIL 22, 2022
Scale: 1" = 30'
Dwg By: MD/AM
Proj No: 0224-SMH

SEAL + SIGNATURE:

COMMONWEALTH OF PENNSYLVANIA
REGISTERED PROFESSIONAL
LITJE M MACY
Registered No. PE081399

THIS DRAWING IS ONLY VALID FOR CONSTRUCTION, BIDDING OR GOVERNMENT AGENCY REVIEW IF SAID DRAWING BEARS AN ORIGINAL STAMPING OF THE SEAL OF THE ARCHITECT WHOSE SIGNATURE APPEARS HEREON. THIS DRAWING IS THE PRODUCT OF SERVICE AND IS THE PROPERTY OF MATTHEW BAIRD ARCHITECT PLLC. IT IS TO BE USED ONLY FOR THE PROJECT NOTED HEREIN. REUSE OF THIS DRAWING FOR ANY PART THEREOF FOR ANY OTHER PROJECT OR ALTERATION OR EXTENSION OF THIS PROJECT IS PROHIBITED WITHOUT THE WRITTEN PERMISSION OF MATTHEW BAIRD ARCHITECT PLLC. ANY UNAUTHORIZED REUSE IS A VIOLATION OF US. COPYRIGHT LAW. UNAUTHORIZED ALTERATIONS OR ADDITIONS TO THIS DRAWING IS A VIOLATION OF SECTION 7209 (2) OF THE NEW YORK STATE EDUCATION LAW.

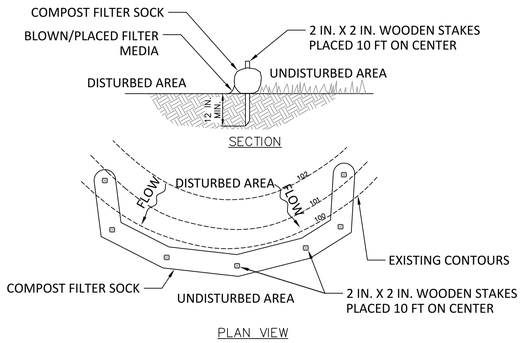

NOTES:

1. SOCK FABRIC SHALL MEET STANDARDS OF TABLE 4.1 OF THE PA DEP EROSION CONTROL MANUAL. COMPOST SHALL MEET THE STANDARDS OF TABLE 4.2 OF THE PA DEP EROSION CONTROL MANUAL.
2. COMPOST FILTER SOCK SHALL BE PLACED AT EXISTING LEVEL GRADE. BOTH ENDS OF THE BARRIER SHALL BE EXTENDED AT LEAST 8 FEET UP SLOPE AT 45 DEGREES TO THE MAIN BARRIER ALIGNMENT. MAXIMUM SLOPE LENGTH ABOVE ANY BARRIER SHALL NOT EXCEED THAT SPECIFIED FOR THE SIZE OF THE SOCK AND THE SLOPE OF ITS TRIBUTARY AREA.
3. TRAFFIC SHALL NOT BE PERMITTED TO CROSS COMPOST FILTER SOCKS.
4. ACCUMULATED SEDIMENT SHALL BE REMOVED WHEN IT REACHES 1/2 THE ABOVE GROUND HEIGHT OF THE BARRIER AND DISPOSED IN THE MANNER DESCRIBED ELSEWHERE IN THE PLAN.
5. COMPOST FILTER SOCKS SHALL BE INSPECTED WEEKLY AND AFTER EACH RUNOFF EVENT. DAMAGED SOCKS SHALL BE REPAIRED ACCORDING TO MANUFACTURER'S SPECIFICATIONS OR REPLACED WITHIN 24 HOURS OF INSPECTION.
6. BIODEGRADABLE COMPOST FILTER SOCKS SHALL BE REPLACED AFTER 6 MONTHS; PHOTODEGRADABLE SOCKS AFTER 1 YEAR. POLYPROPYLENE SOCKS SHALL BE REPLACED ACCORDING TO MANUFACTURER'S RECOMMENDATIONS.
7. UPON STABILIZATION OF THE AREA TRIBUTARY TO THE SOCK, STAKES SHALL BE REMOVED. THE SOCK MAY BE LEFT IN PLACE AND VEGETATED OR REMOVED. IN THE LATTER CASE, THE MESH SHALL BE CUT OPEN AND THE MULCH SPREAD AS A SOIL SUPPLEMENT.
8. SOME OBJECTS OF CONSIDERABLE MASS (I.E CONCRETE BLOCKS, SAND BAGS, ETC.) MUST BE USED IMMEDIATELY DOWNSLOPE OF COMPOST SOCKS PLACED ON PAVED SURFACES (AT THE SAME INTERVALS AS RECOMMENDED BY THE MANUFACTURER FOR STAKES) IN ORDER TO SECURE SOCKS IN PLACE.

1 COMPOST SOCK

NTS

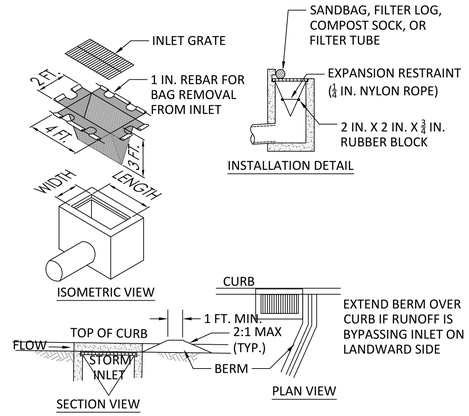

NOTES:

1. MAXIMUM DRAINAGE AREA = 1/2 ACRE.
2. INLET PROTECTION SHALL NOT BE REQUIRED FOR INLET TRIBUTARY TO SEDIMENT BASIN OR TRAP. BERMS SHALL BE REQUIRED FOR ALL INSTALLATIONS.
3. ROLLED EARTHEN BERM SHALL BE MAINTAINED UNTIL ROADWAY IS STONED. ROAD SUBBASE BERM SHALL BE MAINTAINED UNTIL ROADWAY IS PAVED. SIX INCH MINIMUM HEIGHT ASPHALT BERM SHALL BE MAINTAINED UNTIL ROADWAY SURFACE RECEIVES FINAL COAT.
4. AT A MINIMUM, THE FABRIC SHALL HAVE A MINIMUM GRAB TENSILE STRENGTH OF 120 LBS, A MINIMUM BURST STRENGTH OF 200 PSI, AND A MINIMUM TRAPEZOIDAL TEAR STRENGTH OF 50 LBS. FILTER BAGS SHALL BE CAPABLE OF TRAPPING ALL PARTICLES NOT PASSING A NO. 40 SIEVE.
5. INLET FILTER BAGS SHALL BE INSPECTED ON A WEEKLY BASIS AND AFTER EACH RUNOFF EVENT. BAGS SHALL BE EMPTIED AND RINSED OR REPLACED WHEN HALF FULL OR WHEN FLOW CAPACITY HAS BEEN REDUCED SO AS TO CAUSE FLOODING OR BYPASSING OF THE INLET. DAMAGED OR CLOGGED BAGS SHALL BE REPLACED. A SUPPLY SHALL BE MAINTAINED ON SITE FOR REPLACEMENT OF BAGS. ALL NEEDED REPAIRS SHALL BE INITIATED IMMEDIATELY AFTER THE INSPECTION. DISPOSE OF ACCUMULATED SEDIMENT AS WELL AS ALL USED BAGS ACCORDING TO THE PLAN NOTES.
6. DO NOT USE ON MAJOR PAVED ROADWAYS WHERE PONDING MAY CAUSE TRAFFIC HAZARDS.

2 FILTER BAG INLET PROTECTION

NTS

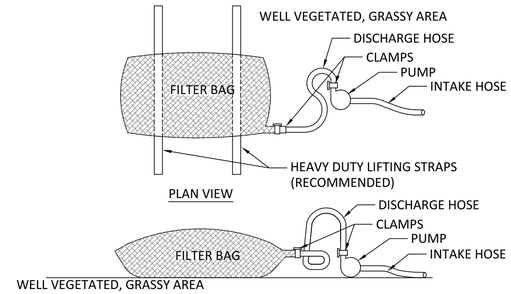

NOTES:

1. LOW VOLUME FILTER BAGS SHALL BE MADE FROM NON-WOVEN GEOTEXTILE MATERIAL SEWN WITH HIGH STRENGTH, DOUBLE STITCHED "J" TYPE SEAMS. THEY SHALL BE CAPABLE OF TRAPPING PARTICLES LARGER THAN 150 MICRONS. HIGH VOLUME FILTER BAGS SHALL BE MADE FROM WOVEN GEOTEXTILES THAT MEET THE FOLLOWING STANDARDS:

PROPERTY	TEST METHOD	MINIMUM STANDARD
AVG. WIDE WIDTH STRENGTH	ASTM D-4884	60 LB/IN
GRAB TENSILE	ASTM D-4632	205 LB
PUNCTURE	ASTM D-4833	110 LB
MULLEN BURST	ASTM D-3786	350 PSI
UV RESISTANCE	ASTM D-4355	70%
AOS % RETAINED	ASTM D-4751	80 SIEVE

2. A SUITABLE MEANS OF ACCESSING THE BAG WITH MACHINERY REQUIRED FOR DISPOSAL PURPOSES SHALL BE PROVIDED. FILTER BAGS SHALL BE REPLACED WHEN THEY BECOME 1/2 FULL OF SEDIMENT. SPARE BAGS SHALL BE KEPT AVAILABLE FOR REPLACEMENT OF THOSE THAT HAVE FAILED OR ARE FILLED. BAGS SHALL BE PLACED ON STRAPS TO FACILITATE REMOVAL UNLESS BAGS COME WITH LIFTING STRAPS ALREADY ATTACHED.
3. BAGS SHALL BE LOCATED IN WELL-VEGETATED (GRASSY) AREA, AND DISCHARGE ONTO STABLE, EROSION RESISTANT AREAS. WHERE THIS IS NOT POSSIBLE, A GEOTEXTILE UNDERLAYMENT AND FLOW PATH SHALL BE PROVIDED. BAGS MAY BE PLACED ON FILTER STONE TO INCREASE DISCHARGE CAPACITY. BAGS SHALL NOT BE PLACED ON SLOPES GREATER THAN 5%. FOR SLOPES EXCEEDING 5%, CLEAN ROCK OR OTHER NON-ERODIBLE AND NON-POLLUTING MATERIAL MAY BE PLACED UNDER THE BAG TO REDUCE SLOPE STEEPNESS.
4. NO DOWNSLOPE SEDIMENT BARRIER IS REQUIRED FOR MOST INSTALLATIONS. COMPOST BERM OR COMPOST FILTER SOCK SHALL BE INSTALLED BELOW BAGS LOCATED IN HQ OR EV WATERSHEDS, WITHIN 50 FEET OF ANY RECEIVING SURFACE WATER OR WHERE GRASSY AREA IS NOT AVAILABLE.
5. THE PUMP DISCHARGE HOSE SHALL BE INSERTED INTO THE BAGS IN THE MANNER SPECIFIED BY THE MANUFACTURER AND SECURELY CLAMPED. A PIECE OF PVC PIPE IS RECOMMENDED FOR THIS PURPOSE.
6. THE PUMPING RATE SHALL BE NO GREATER THAN 750 GPM OR 1/2 THE MAXIMUM SPECIFIED BY THE MANUFACTURER, WHICHEVER IS LESS. PUMP INTAKES SHALL BE FLOATING AND SCREENED.
7. FILTER BAGS SHALL BE INSPECTED DAILY. IF ANY PROBLEM IS DETECTED, PUMPING SHALL CEASE IMMEDIATELY AND NOT RESUME UNTIL THE PROBLEM IS CORRECTED.

3 PUMPED WATER FILTER BAG

TYPICAL N.T.S.

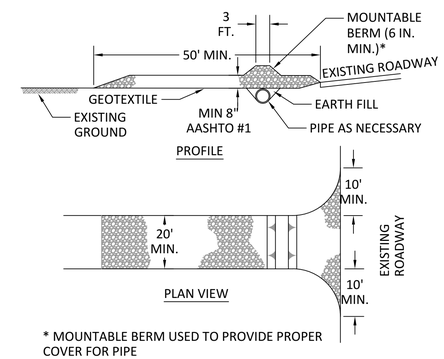

* MOUNTABLE BERM USED TO PROVIDE PROPER COVER FOR PIPE

NOTES:

1. REMOVE TOPSOIL PRIOR TO INSTALLATION OF ROCK CONSTRUCTION ENTRANCE. EXTEND ROCK OVER FULL WIDTH OF ENTRANCE.
2. RUNOFF SHALL BE DIVERTED FROM ROADWAY TO A SUITABLE SEDIMENT REMOVAL BMP PRIOR TO ENTERING ROCK CONSTRUCTION ENTRANCE.
3. MOUNTABLE BERM SHALL BE INSTALLED WHEREVER OPTIONAL CULVERT PIPE IS USED AND PROPER PIPE COVER AS SPECIFIED BY MANUFACTURER IS NOT OTHERWISE PROVIDED. PIPE SHALL BE SIZED APPROPRIATELY FOR SIZE OF DITCH BEING CROSSED.
4. MAINTENANCE: ROCK CONSTRUCTION ENTRANCE THICKNESS SHALL BE CONSTANTLY MAINTAINED TO THE SPECIFIED DIMENSIONS BY ADDING ROCK. A STOCKPILE SHALL BE MAINTAINED ON SITE FOR THIS PURPOSE. ALL SEDIMENT DEPOSITED ON PAVED ROADWAYS SHALL BE REMOVED AND RETURNED TO THE CONSTRUCTION SITE IMMEDIATELY. IF EXCESSIVE AMOUNTS OF SEDIMENT ARE BEING DEPOSITED ON ROADWAY, EXTEND LENGTH OF ROCK CONSTRUCTION ENTRANCE BY 50 FOOT INCREMENTS UNTIL CONDITION IS ALLEVIATED OR INSTALL WASH RACK. WASHING THE ROADWAY OR SWEEPING THE DEPOSITS INTO ROADWAY DITCHES, SEWERS, CULVERTS, OR OTHER DRAINAGE COURSES IS NOT ACCEPTABLE.

4 ROCK CONSTRUCTION ENTRANCE

NTS

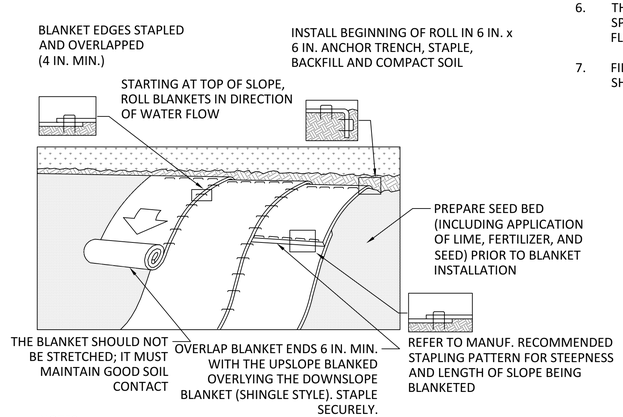

NOTES:

1. EROSION CONTROL BLANKET REQUIRED ON ALL SLOPES 3:1 AND GREATER.
2. SEED AND SOIL AMENDMENTS SHALL BE APPLIED ACCORDING TO THE RATES IN THE PLAN DRAWINGS PRIOR TO INSTALLING THE BLANKET.
3. PROVIDE ANCHOR TRENCH AT TOE OF SLOPE IN SIMILAR FASHION AS AT TOP OF SLOPE.
4. SLOPE SURFACE SHALL BE FREE OF ROCKS, CLODS, STICKS, AND GRASS.
5. BLANKET SHALL HAVE GOOD CONTINUOUS CONTACT WITH UNDERLYING SOIL THROUGHOUT ENTIRE LENGTH. LAY BLANKET LOOSELY AND STAKE OR STAPLE TO MAINTAIN DIRECT CONTACT WITH SOIL. DO NOT STRETCH BLANKET.
6. THE BLANKET SHALL BE STAPLED IN ACCORDANCE WITH THE MANUFACTURER'S RECOMMENDATIONS.
7. BLANKETED AREAS SHALL BE INSPECTED WEEKLY AND AFTER EACH RUNOFF EVENT UNTIL PERENNIAL VEGETATION IS ESTABLISHED TO A MINIMUM UNIFORM 70% COVERAGE THROUGHOUT THE BLANKETED AREA. DAMAGED OR DISPLACED BLANKETS SHALL BE RESTORED OR REPLACED WITHIN 4 CALENDAR DAYS.

5 EROSION CONTROL BLANKET INSTALLATION

NTS

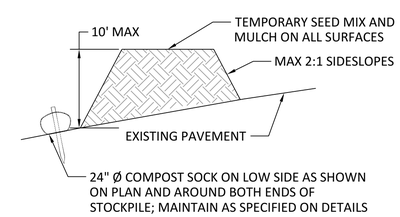

MAINTENANCE NOTES:

1. TEMPORARILY STOCKPILE TOPSOIL OR EXCAVATED SOIL MATERIAL AS NEEDED AT LOCATIONS SHOWN FOR EACH PHASE OF CONSTRUCTION. EXCESS EXCAVATED MATERIAL SHALL BE PERMANENTLY REMOVED FROM THE SITE.
2. HEIGHT AND SIDESLOPES SHALL NOT EXCEED MAXIMUM VALUES SHOWN ON DETAIL.
3. INSTALL COMPOST SOCK PRIOR TO STOCKPILING OF MATERIAL. REPLACE ANY COMPOST SOCK REMOVED FOR VEHICULAR ACCESS AFTER EACH WORK DAY.
4. APPLY SEED AND MULCH WHEN PILE IS NOT SUBJECT TO VEHICULAR ACCESS FOR SEVEN DAYS OR MORE.

6 TEMPORARY SOIL STOCKPILE

NTS

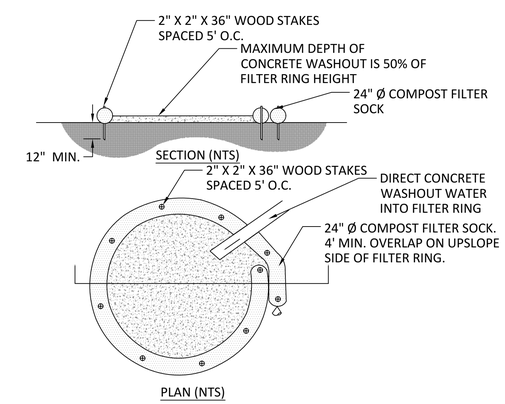

NOTES:

1. INSTALL ON FLAT GRADE FOR OPTIMUM PERFORMANCE.
2. 18" Ø FILTER SOCK MAY BE STACKED ONTO DOUBLE 24" Ø SOCKS IN PYRAMIDAL CONFIGURATION FOR ADDED HEIGHT.
3. A SUITABLE IMPERVIOUS GEOMEMBRANE SHALL BE PLACED AT THE LOCATION OF THE WASHOUT PRIOR TO INSTALLING THE SOCKS.

7 CONCRETE WASHOUT

NTS

THIS DRAWING IS ONLY VALID FOR CONSTRUCTION, BIDDING OR GOVERNMENT AGENCY REVIEW IF SAID DRAWING BEARS AN ORIGINAL STAMPING OF THE SEAL OF THE ARCHITECT WHOSE SIGNATURE APPEARS HEREON. THIS DRAWING IS THE PRODUCT OF SERVICE AND IS THE PROPERTY OF MATTHEW BAIRD ARCHITECT PLLC. IT IS TO BE USED ONLY FOR THE PROJECT NOTED HEREIN. REUSE OF THIS DRAWING FOR ANY OTHER PROJECT OR ALTERATION OR EXTENSION OF THIS PROJECT IS PROHIBITED WITHOUT THE WRITTEN PERMISSION OF MATTHEW BAIRD ARCHITECT PLLC. ANY UNAUTHORIZED REUSE IS A VIOLATION OF US COPYRIGHT LAW. UNAUTHORIZED ALTERATIONS OR ADDITIONS TO THIS DRAWING IS A VIOLATION OF SECTION 7209 (2) OF THE NEW YORK STATE EDUCATION LAW.

M A T T H E W B A I R D A R C H I T E C T S
277 Broadway, 10th Floor
New York, NY 10007
T: 212.334.2499
F: 212.285.1049

LANDSCAPE ARCHITECT:
ANDROPOGON
2209 Chestnut Street
Philadelphia, PA 19103
T: 215 487 0700

LOCAL ARCHITECT:
KRIEGER AND ASSOCIATES
14 W Highland Avenue
Philadelphia, PA 19118
T: 215 247 2020

CIVIL ENGINEER:
MELIORA
259 Morgan Street
Phoenixville, PA 19460
T: 610 933 0123

ZONING CODE:
BALLARD SPAHR
1735 Market Street, 51st Floor
Philadelphia, PA 19103
T: 215 665 8500

REVISION

NO:	DATE:	REMARK:

ISSUED FOR:
ZONING PERMIT

EROSION AND SEDIMENT CONTORL DETAILS

PROJECT:
0224
WOODMERE ART MUSEUM
ST. MICHAEL'S HALL

9001 Germantown Ave.
Philadelphia, PA 19118

Date: APRIL 22, 2022
Scale: 1" = 30'
Dwg By: MD/AM
Proj No: 0224-SMH

SEAL + SIGNATURE:
COMMONWEALTH OF PENNSYLVANIA
REGISTERED PROFESSIONAL
ALTUE M MACY
ENGINEER No. PE089399